Deckblatt Übersetzung

Daten der Übersetzung:

Court/Gericht:	Bundesgerichtshof
Date of Decision / Datum der Entscheidung:	2020-02-13
Docket Number / Aktenzeichen:	X ZR 6/18
Name of Decision / Name der Entscheidung:	Bausatz

Arbeitskreis Patentgerichtswesen in Deutschland e.V.

FEDERAL COURT OF JUSTICE

IN THE NAME OF THE PEOPLE

JUDGMENT

X ZR 6/18

Pronounced on:
13 February 2020
Zöller
Judicial Secretary
as Clerk of the
Court Registry

in the patent nullity proceedings

Bausatz/
Building kit

Patent Act Sec. 119(5), 83

a) In patent nullity proceedings, if the Federal Court of Justice sets aside the judgment of the Patent Court for lack of relevance, the case must regularly be referred back to the Patent Court for a new hearing and decision if the Patent Court has not yet made an initial assessment of the state of the art in terms of patentability (confirmation of Federal Court of Justice, judgment of July 7, 2015 – X ZR 64/13, GRUR 2015, 1095 marginal no. 39 – *Bitratenreduktion I*).

b) However, a decision of the Federal Court of Justice in the nullity appeal proceedings may be relevant if the Patent Court has dealt with the patentability of the subject matter of the patent in suit in its indication under Sec. 83 Patent Act, taking into account the submissions of both parties.

Federal Court of Justice, judgment of February 13, 2020 – X ZR 6/18 – Federal Patent Court

ECLI:DE:BGH:2020:130220UXZR6.18.0

The X. Civil Senate of the Federal Court of Justice, following the oral hearing on February 13, 2020, attended by the judges Dr. Grabinski and Hoffmann, the judges Dr. Kober-Dehm and Dr. Rombach and the judge Dr. Rensen

ruled that:

> On appeal by the defendant, the judgment of the 7th Senate (Nullity Senate) of the Federal Patent Court of December 7, 2017 is amended.
>
> European patent 1 338 711 is declared null and void with effect for the territory of the Federal Republic of Germany insofar as patent claim 1 goes beyond a version in which the word "retractable" is inserted before the word "fastening device" and the further claims refer back to the claim thus worded.
>
> In all other respects, the action is dismissed.
>
> The costs of the legal dispute shall be borne by the plaintiff.

By operation of law

Facts of the case:

1 The defendant is the proprietor of European patent 1 338 711 (patent in suit), which was granted with effect for the Federal Republic of Germany, was applied for on January 16, 2003, claiming an Italian priority of February 26, 2002, and relates to a fastening device for wall-mounted objects. Patent claim 1, to which the remaining eleven claims refer, reads in the language of the proceedings:

> "A building kit comprising an object (17) to be mounted on a wall and a fastening device (10) for said object, said

fastening device comprising a tube (11), a clamping sleeve (18), a screw element (24) and a pre-assembly housing (19) for making contact between the sleeve (18) and the object (17), wherein, in use

- the tube (11) has an internally threaded portion (12) for engagement with a matingly threaded bolt (13) for cantilever attachment to a wall (14), the tube (11) being insertable into a corresponding through hole (15) of a part (16) of the object (17) to be mounted
- the clamping sleeve (18) is insertable so as to surround the tube (11) screwed onto the bolt (13) until it abuts against an inner wall of the part (16) of the object (17) to be mounted,
- the screw element (24) engages in a radial through hole (25) of the sleeve (18) and acts with the corresponding end on an inclined surface (27) formed by a corresponding radial recess (28) of the tube (11)

wherein the tightening of the screw element (24), due to the presence of said inclined surface (27), causes a pulling action on the tube (11) and a pushing action of the sleeve (18) in axial direction with respect to the bolt (13) on the part of the object (17) to be mounted, in order to tighten it against the wall".

2 The plaintiff claimed that the subject matter of the patent in suit was not patentable and went beyond the content of the original application documents. The defendant defended the patent in suit with the main request and with five auxiliary requests in amended form. The version of claim 1 defended by the main request provides as an additional feature compared to the granted version that the fastening device is retractable.

3 The Patent Court declared the patent in suit null and void, dismissing the further action, insofar as its subject matter extends beyond the version defended by auxiliary request IIa, according to which in patent claim 1 the word "retractable" is inserted before the word "fastening device (10)" and the words "with a cup-shaped section (20) and elastically deformable wings (21) with hook-shaped ends (22)" are inserted after the word "pre-assembly housing (19)" and patent claims 4 and 5 are deleted. The claims remaining thereafter are to refer back to the amended version of patent claim 1; references back to patent claims 4 and 5 of the granted version are to be omitted.

4 This is the subject of the defendant's appeal, which continues to defend the patent in suit in the version of its main request at first instance and with the auxiliary requests I and II at first instance as well as two additional auxiliary requests (Ia and Ib). The plaintiff opposes the appeal.

Grounds of the decision:

5 The admissible appeal is well-founded and, insofar as the defendant still defends the patent in suit, leads to the dismissal of the action.

6 I. The patent in suit relates to a building kit consisting of a wall-mounted object and a fastening device provided therefor.

7 1. In the description of the patent in suit it is stated that conventional sanitary objects are increasingly being replaced by self-supporting objects fixed to the wall without supports or feet standing on the floor (so-called wall-mounted objects). These are generally superior to conventional objects in terms of hygiene, space consumption in the bathroom and aesthetic appearance. The only disadvantage of the wall-mounted objects is that the fixing points of the fixing systems normally provided for this purpose are visible and thus the aesthetic appearance is strongly impaired.

8 The Patent Court, referring to the formulation of the task of the invention in the patent specification, assumed that the technical problem consisted in providing a building kit with an object to be mounted on the wall and a fastening device for this object, which enables a simple, safe and completely retractable mounting of this object to the wall. However, the design of the fastening as retractable is not part of the task, but is already part of the solution according to the invention. In view of this and taking into account the further aspects mentioned in the patent in suit in connection with the description of the task, the technical problem is generally to be seen in providing a building kit with an object to be mounted on the wall and a fastening device for this object, which enables an invisible but nevertheless safe and precise fastening of the object with simple mountability.

9 2. To solve this problem the patent in suit, in the version defended by the defendant with the main request, proposes a building kit, the features of which can be structured as follows (amendments of the granted version of patent claim 1 according to the main request underlined; additional features of patent claim 1 in the version of the contested judgment [auxiliary request IIa] in italics; bullet points of the Patent Court in square brackets):

1. The building kit consists of
    - 1.1 an object (17) [0] to be mounted on a wall and
    - 1.2 a <u>retractable</u> fastening device (10) for this object [0], which comprises
        - 1.2.1 a tube (11) [1],
        - 1.2.2 a bolt (13) for cantilever fastening to a wall [1.1.1 (partly); 1.1.2],
        - 1.2.3 a clamping sleeve (18) [2],
        - 1.2.4 a screw element (24) [3] and
        - 1.2.5 a pre-assembly housing (19) [4].
2. In the state of use applies:
    - 2.1 The tube (11)
        - 2.1.1 has
            - 2.1.1.1 an internally threaded section (12), which engages a mating thread provided on the bolt (13) [1.1.1], and
            - 2.1.1.2 an inclined surface (27) formed by a corresponding radial recess (28) of the tube (11) [3.2], and
        - 2.1.2 is inserted ("to be inserted") into a corresponding through hole (15) of a part (16) of the object (17) to be mounted [1.2];
    - 2.2 the clamping sleeve (18)
        - 2.2.1 is insertable so as to surround the tube (11) screwed onto the bolt (13) until it abuts against an inner wall of the part (16) of the object (17) to be mounted [2.1];
    - 2.3 The screw element (24)
        - 2.3.1 engages in a radial through hole (25) of the sleeve (18) [3.1]; and
        - 2.3.2 acts with the corresponding end on the inclined surface (27) [3.2],

2.3.3 wherein the tightening of the screw element (25) resulting from the presence of the inclined surface (27) causes [3.3]:

2.3.2.1 a pulling action on the tube (11) [3.3.1], and

2.3.2.2 a pushing action of the sleeve (18) in the axial direction with respect to the bolt (13) on the part (16) of the object (17) to be mounted [3.3.2],

2.3.2.3 to clamp the object (17) against the wall [3.3.3].

3. the pre-assembly housing (19)

3.1 establishes contact between the sleeve (18) and the object (17) [4;

3.2 and has

3.2.1 a cup-shaped section (20) and

3.2.2 elastically deformable wings (21) with hook-shaped ends (22).

10 3. As the Patent Court, not objected to by the parties, correctly stated, the skilled person is a mechanical engineer with experience in the design and manufacture of fasteners and fastener systems, in particular in the field of installation.

11 4. The skilled person takes from the teaching of the invention, that the object is mounted on the wall by means of a retractable fastening device, which is consequently no longer visible after final assembly ("in use"). For this purpose, the fastening device comprises a tube, which is screwed at one end onto a bolt fixed in the wall, is guided through a through-hole located on a part of the object, and at the other end of which a clamping sleeve is arranged, which rests against the inner wall of the part of the object and tensions the object against the wall as a result of the thrust effect of the sleeve exerted when the screw element is tightened, and is fastened in this way.

12 It is of central importance for the simple assembly of such a fastening device that the clamping sleeve can be fixed to the inner wall of the part of the object to be mounted, to which it is to be fastened to the wall. For this purpose, according to the invention, a pre-assembly housing is provided, which establishes the contact between the clamping sleeve and the object to be

mounted on the wall (feature 3.1). In addition, it is provided that the clamping sleeve must be insertable in such a way that it surrounds the tube screwed onto the bolt until it abuts against the inner wall of the object to be mounted (feature 2.2.1). It follows from that, that the pre-assembly housing holds the clamping sleeve after pre-assembly in a position in which the clamping sleeve rests against the inner wall of the object, so that it becomes possible to push both parts onto the tube fastened to the wall via the bolt during final assembly and, when the screw element is tightened, to apply the resulting thrust effect of the sleeve specifically to the rear wall of the object so that it can be clamped against the wall.

13 Patent claim 1 does not contain any further specifications as to how the pre-assembly housing must be designed in detail. In particular, it is also left to the discretion of the skilled person whether he designs the pre-assembly housing as a separate component from the clamping sleeve or as a single piece in combination with the sleeve. This is clear from the two embodiments of the patent in suit, which are described as "according to the invention" and which, as will be explained further below, disclose a possible design for both variants.

14 a) The first embodiment described in the description of the patent in suit comprises a pre-assembled housing, the design of which is shown in Figures 3 and 4 of the patent in suit.

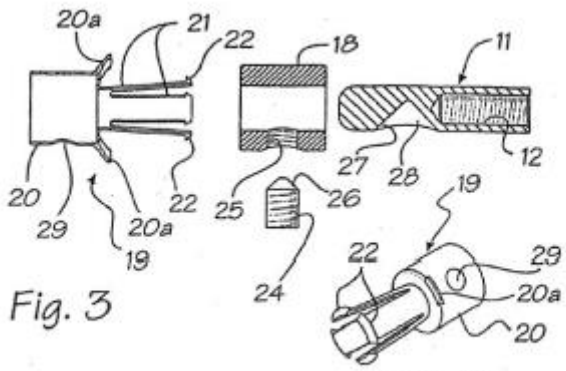

Fig. 3 Fig. 4

15 Thereafter, the housing has a cup-shaped portion (20) and a plurality of diverging, predominantly axially extending wings (21), which are elastically

deformable upon bending, and positioning wings (20a), which extend laterally from the base of the cup-shaped portion (20).

16 The arrangement and operation of the pre-assembly housing in this embodiment are shown in Figures 5 and 7 of the patent in suit, reproduced below:

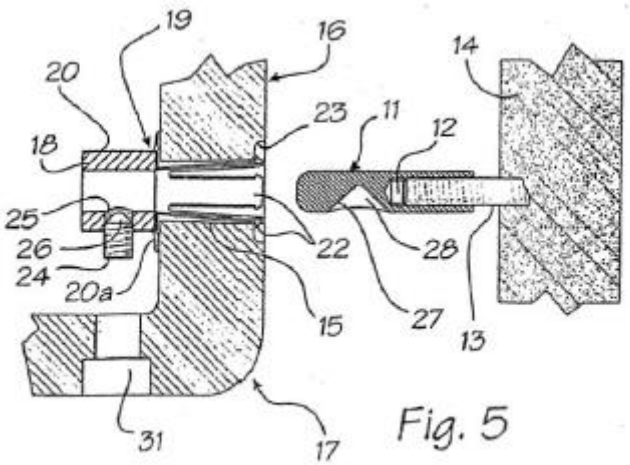

Fig. 5

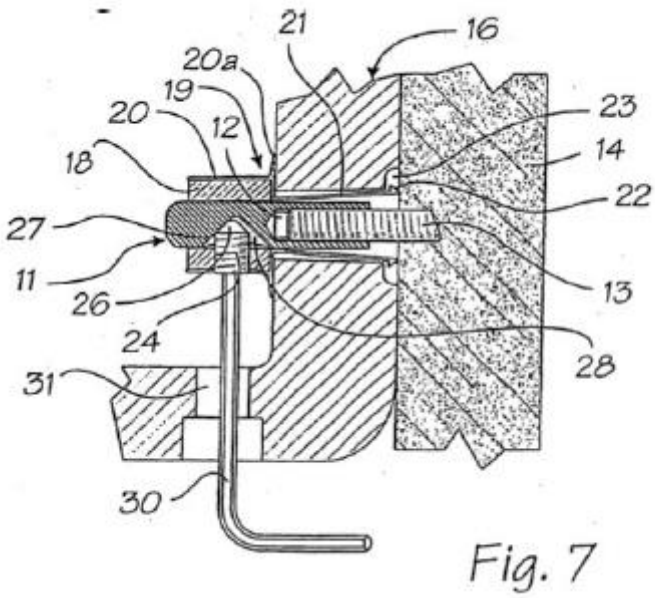

Fig. 7

17 Then the pre-assembly housing (19) receives the sleeve (18) in its cup-shaped section (20) and is inserted together with it on the sanitary object. For this purpose, the wings (21) of the housing are inserted into the drill hole (15) until the wing ends (22) engage in the seat (23), while the positioning wings (20a) of the housing come to rest against the inside of the object. The screw

element (24) is almost completely unscrewed and hangs over the radial through holes (29) and (25) of the pre-assembly housing and sleeve with its end (26) inside the sleeve (ref. paras. 25, 26 and 29). The tube (11) is screwed onto the bolt (13) fixed in the wall (14) to such an extent that, when the tube is subsequently inserted into the sleeve, the inclined surface (27) is positioned at the level of the screw element so that, when the screw element is tightened, the pulling and pushing action according to features 4.2.1 and 4.2.2 is exerted and the object is clamped against the wall (Descr. paras. 35 and 36).

18 b) The fastening device according to the second embodiment, which is illustrated in Figure 9 of the patent in suit reproduced below, does not have a separate component, with which the contact between the sleeve and the object to be fastened is mediated by way of pre-assembly.

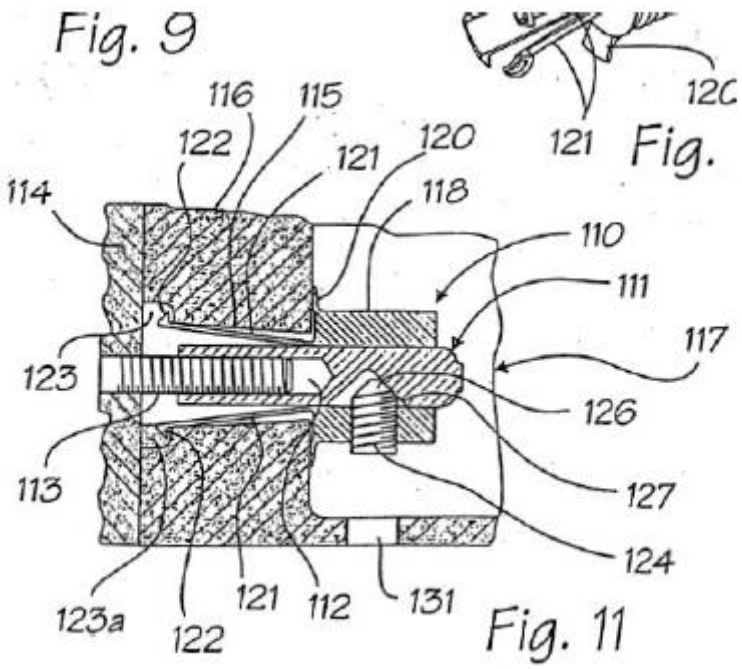

19 Instead, similar to the pre-assembly housing of the first embodiment, the sleeve itself is provided with a plurality of diverging, predominantly axially extending wings and positioning wings that are elastically deformable upon bending and extend integrally therefrom. As in the case of the pre-assembled housing of the first embodiment, the contact of the sleeve with the sanitary object is mediated in such a way that the wings are inserted into the hole (115) provided for the suspension of the object and the positioning wings extending

laterally from the base of the sleeve are applied to the inner sides of the sanitary object (ref. paras. 42 and 43). Thus, in addition to its actual function, the sleeve in the second embodiment also fulfills the function of a pre-assembly means. This is also confirmed by the fact that, according to the description, it is considered expedient in this embodiment if a radial tooth (123a) is arranged in the seat (123) of the object between two adjacent wings, which forms a pre-assembly stop of the sleeve there (patent specification para. 45).

20 II. The Patent Court gave the following main reasons for its decision:

21 The patent in suit, in the version defended by the main request, goes beyond the content of the original application documents. These did not disclose a pre-assembly housing in the general sense envisaged by claim 1 of the defended version, which merely stated that the pre-assembly housing established contact between the sleeve and the object. In the first embodiment described in the application, the contact between the sleeve and the object is mediated by a pre-assembly housing having a cup-shaped portion for receiving the sleeve and a plurality of diverging wings, mainly axially extending and elastically deformable upon bending, which are insertable outside the tube into the hole provided for the mounting of the object until their hook-shaped ends engage in a seat formed on the other side of the object part. In the second embodiment shown in the application, the sleeve itself has a plurality of diverging, predominantly axially extending wings, which are elastically deformable in bending, and which, like the wings of the cup-shaped section of the pre-assembly housing in the first embodiment, can be inserted outside the tube into the hole provided for the suspension of the object. According to both embodiments, and thus irrespective of whether the pre-assembly housing is designed as a separate component or as a single piece by means of a corresponding design of the sleeve, elastically deformable wings with hook-shaped ends are provided in any case for establishing the contact between the sleeve and the object. Other possibilities for making contact are not mentioned in the application documents, so that the skilled person cannot take from them the teaching that the contact is generally made by a pre-assembled housing. A generalization of the embodiments described in the application in this sense is out of the question, since the term "pre-assembly housing" has no fixed content,

which could convey to the skilled person the idea that, apart from the solutions described in the application documents, other possibilities for establishing contact between the sleeve and the object are also possible. Other possibilities for establishing contact would have only become apparent to the skilled person after reading the application documents on the basis of his own considerations supported by his technical knowledge. These were therefore not part of the technical teaching conveyed by the application.

22 However, the patent in suit was valid in the version defended by auxiliary request IIa. The defense in this version is admissible and is not challenged by the plaintiff.

23 III. Insofar as the defendant no longer defends the patent in suit, the declaration of nullity remains in force without further examination of the merits. In all other respects, the assessment of the Patent Court does not stand up to review in the appeal proceedings. The subject matter of claim 1 in the version defended by the main request is not based on an inadmissible extension. Moreover, it is patentable.

24 1. The Patent Court wrongly assumed that the subject matter of claim 1 as defended by the main request goes beyond the content of the originally filed documents, to which the published patent application (KWP4) corresponds.

25 a) According to Art. II Sec. 6(1), first sentence, No. 3, German Act on International Patent Conventions, a European patent shall be declared null and void with effect for the territory of the Federal Republic of Germany if its subject matter goes beyond the content of the application as originally filed. The relevant content of the application shall be determined on the basis of the entirety of the documents originally filed. It is not limited to the subject matter of the claims formulated in the application. Rather, the decisive factor is what a skilled person with average knowledge and ability can infer from the original documents as belonging to the invention.

26 According to the established case law of the Federal Court of Justice, the principles of novelty testing apply to the assessment of identical disclosure.

Accordingly, it is required that the skilled person can directly and unambiguously infer the technical teaching designated in the claim from the original documents as a possible embodiment of the invention. When exhausting the content of the disclosure, generalizations of examples of embodiments originally disclosed are also permissible. This applies in particular if only one or only some of several features of an embodiment, which taken together, but also considered individually, are conducive to the success of the invention, have been included in the claim (Federal Court of Justice, judgment of February 11, 2014 – X ZR 107/12, BGHZ 200, 63 = GRUR 2014, 542 marginal no. 21 et seq. – *Kommunikationskanal*; judgment of November 8, 2016 – X ZB 1/16, GRUR 2017, 54 marginal no. 44 – *Ventileinrichtung*; judgment of November 7, 2017 – X ZR 63/15, GRUR 2018, 175 marginal no. 30 – *Digitales Buch*).

27 b) Based on this, it is not objectionable if patent claim 1, in the version defended by the main request, only generally provides for a pre-assembly housing for establishing a contact between the sleeve and the object, without adopting the features of the pre-assembly housing or the part of the sleeve serving for pre-assembly from patent claims 2 and 4 of the application or the corresponding embodiments described in the description of the application.

28 aa) The embodiments described in the originally filed documents and in the patent in dispute all have components as pre-assembly means which have several diverging, predominantly axially extending wings with hook-shaped ends which are elastically deformable on bending and which engage in a seat formed in the object to be mounted. However, there is nothing in the application documents to indicate that the solution to the problem addressed by the application depends on the contact between the sleeve and the object to be mounted being made with pre-assembly means having the elastically deformable wings with hook-shaped ends provided in both embodiments.

29 The task underlying the invention is already formulated in the application as providing a fastening device that enables precise and secure fastening without impairing the overall aesthetic impression and is easy to install (patent application, paras. 10-12). Further, the claimed fastening device is intended to be flexible in application with respect to both the type of object and the type of wall (patent application para. 13).

30 Both embodiments described in the application and in accordance with the description of the patent in suit provide for a pre-assembly means, which mediates the contact between the sleeve and the object to be mounted. Whereas in the first embodiment a separate component is provided for this purpose in the form of the pre-assembly housing (patent application, para. 22), the second embodiment has an element formed integrally with the sleeve (patent application, para. 39). Moreover, in the second embodiment example, it is considered useful if the object to be mounted has, in the seat of the hole provided for the suspension, a radial tooth that can interpose itself between two adjacent wings of the sleeve, thus forming a pre-assembly stop of the sleeve (patent application par. 42). Moreover, in both embodiments, the pre-assembly housing or sleeve may have a plurality of positioning wings extending laterally from the periphery of the cup-shaped portion or laterally from the periphery of the sleeve, respectively, for abutment against the inside of the portion of the object to be mounted (patent application paras. 23 and 40; patent claims 3 and 5).

31 In view of these examples, it is readily apparent to a skilled person that an object can be mounted securely and yet in a simple manner without visible attachment points when a pre-assembly means provides contact between the sleeve and the object (patent application para. 22), in which the sleeve does not merely abut against the inner wall of the object (patent application para. 16, claim 1, in each case 2nd indent), but in addition is securely and correctly positioned in the object in such a way that when the screw element is tightened, the thrust effect of the sleeve caused thereby can be specifically applied to the rear wall of the object in order to clamp the latter against the wall (patent application par. 16, claim 1, in each case 4th indent). Accordingly, the skilled person recognizes that this general teaching is explained in the original documents only by way of example on the basis of pre-assembly means comprising elastically deformable wings insertable into the hole provided for the suspension of the object, which wings are provided with positioning wings for abutment against the inner side of a section of the object to be mounted, and the hook-shaped ends of which engage in a corresponding seat formed on the object.

32 bb) Against this background, it is sufficiently clearly disclosed in the application that the invention generally comprises fastening devices having a pre-assembly housing for making contact between the clamping sleeve and the object to be mounted. Consequently, the defendant was not prevented from including the pre-assembly means described in claims 2 and 4 and the embodiments of the application in claim 1 in a generalized form with the wording "pre-assembly housing for establishing a contact between sleeve and object" without specifying in detail the design elements shown in the embodiments.

33 c) An inadmissible extension is also not to be found in the fact that patent claim 1 in the version defended by the main application deals with a building kit consisting of an object to be mounted on a wall and a retractable fastening device, and does not merely concern a fastening device for such an object.

34 As the Patent Court correctly decided, such a building kit is already disclosed in the application documents. Patent claim 12 of the application relates to an object for mounting using a (fastening) device according to one of the preceding claims.

35 2. The contested decision does not prove to be correct for other reasons either. Contrary to the plaintiff’s view, the subject matter of patent claim 1 is not suggested by the state of the art.

36 a) A decision of the Federal Court of Justice on the merits is appropriate in the case in dispute (Sec. 119(5) Patent Act).

37 According to the basic idea of the reformed patent nullity proceedings, the patentability shall first be assessed by the Patent Court composed of technically competent judges. Accordingly, a decision by the Federal Court of Justice in this regard is regularly not appropriate if there is no initial assessment of the state of the art by the Patent Court in terms of patentability (Federal Court of Justice, judgment of July 7, 2015 – X ZR 64/13, GRUR 2015, 1095 marginal no. 39 – *Bitratenreduktion I*).

38 However, the case in dispute has the distinctive feature that the Patent Court, in its reference under Sec. 83 Patent Act, dealt with the patentability of

the subject matter of the patent in suit, taking into account the submissions of both parties, and affirmed it. In particular, the plaintiff also commented in detail on the opinion of the Patent Court in the appeal proceedings. Under these circumstances, a decision of the Senate on the merits is appropriate.

39 b) Whether the Dutch patent application 9 401 071 (E2) mentioned in paragraph 11 of the description of the patent in suit or – as the plaintiff states – the German utility model 79 10 865 (E1) is to be regarded as the starting point for the considerations of the skilled person, who is confronted with the task of providing a fastening device for a wall-mounted object, which enables an invisible but nevertheless secure and precise fastening of the object with easy mountability, can ultimately be left open. The subject matter of patent claim 1 in the version defended by the main application is not suggested to the skilled person by either of these two publications, not even in combination.

40 aa) E2 concerns an assembly group for mounting a wall-mounted toilet as well as a toilet suitable for the use of such a mounting group. In Figure 2, an embodiment of the mounting assembly is shown in cross-section in the mounted state:

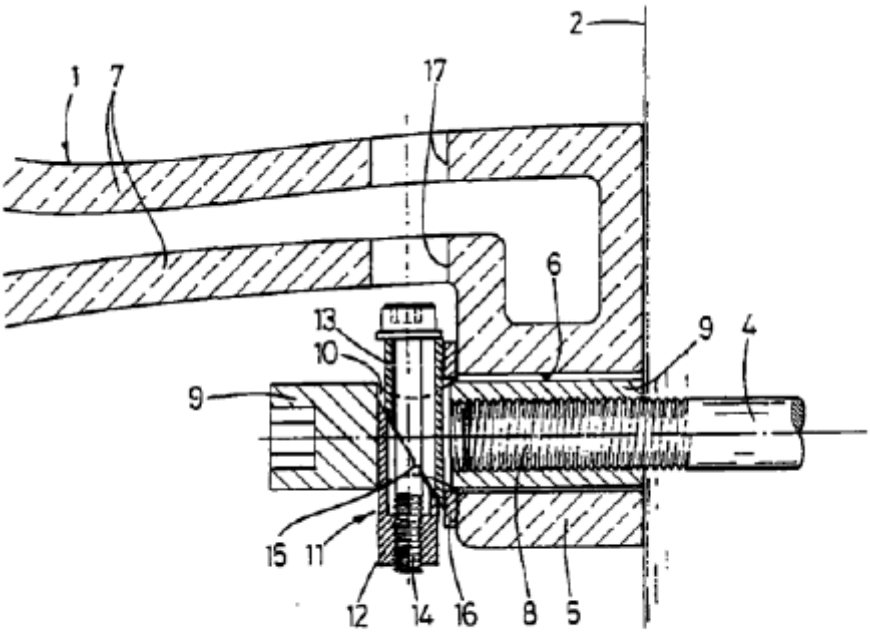

Fig.2

41 According to this, the assembly group comprises a support hook (4) which is at least partially provided with a thread (8), an auxiliary part (9) with an internal thread corresponding to the thread of the support hook, and a clamping part (11) consisting of two sleeve segments (12 and 13), which are held together by an axially tensionable screw (14). According to the description, first the support hook is attached to the wall (2) and the auxiliary part is screwed onto the thread of the support hook. Then the toilet bowl (1) with its suspension eyes (6) is pushed over the auxiliary parts until the back wall (5) of the toilet rests against the wall. Via the mounting opening (17), the clamping part (11) is inserted through the transverse openings (10) of the support hook and the auxiliary part and the clamping screw is tightened, as a result of which the lower sleeve segment (12) presses against the outer part of the auxiliary part and the upper sleeve segment (13) presses against the rear wall (5) of the toilet bowl via the underlay ring (16), thus clamping the toilet bowl against the wall.

42 (1) Thus, of feature group 1, all features except feature 1.2.5 are disclosed. Likewise, features 2.1.1.1 and 2.1.2 are disclosed.

43 (2) However, feature 2.1.1.2 as well as feature groups 2.2 and 2.3 are not disclosed. Unlike in the patent in suit, the clamping device does not surround the auxiliary part corresponding to the pipe according to feature 1.2.1, onto which the toilet bowl is pushed, but is arranged in a transverse opening of this auxiliary part. The pressure generated when the clamping screw is tightened is transmitted to the auxiliary part and the rear wall of the toilet via inclined surfaces (15) formed on the sleeve segments of the clamping part, whereas in the patent in suit the pulling effect on the tube and the pushing effect on the inner wall of the object are caused not by an inclined surface formed on the clamping sleeve but by an inclined surface formed on the tube.

44 (3) Similarly, E2 does not disclose a pre-assembly housing according to feature 3.1. Since the clamping part can be inserted into the transverse opening of the auxiliary part via an assembly opening after the toilet has already been slid over the auxiliary part with its suspension lugs, a pre-assembly housing in the sense of feature 3.1, which enables the sleeve and the object to be mounted to be connected in order to facilitate assembly before the latter is

slid onto the tube screwed to the bolt, is not necessary in this design and is accordingly not provided.

45 (4) From E2 itself, there was neither a reason nor a suggestion for the skilled person to arrange the clamping means as in feature 3. Like the patent in suit, E2 also aims at a fastening, which does not impair the appearance of the sanitary object from the outside as far as possible (E2 supra. p. 3 above) and discloses a solution for this purpose, in which, not unlike in the patent in suit, only mounting holes, but not the individual elements of the fastening device, are visible from the outside and thus an essentially smooth outer wall can be maintained.

46 bb) E1 concerns a shelf with several parallel vertical supporting walls between which shelves or other elements, such as doors or showcases, are arranged. Figure 3, reproduced below, shows a profile intended to allow a concealed connection between the shelf and the vertical supporting wall and the application of a high clamping force:

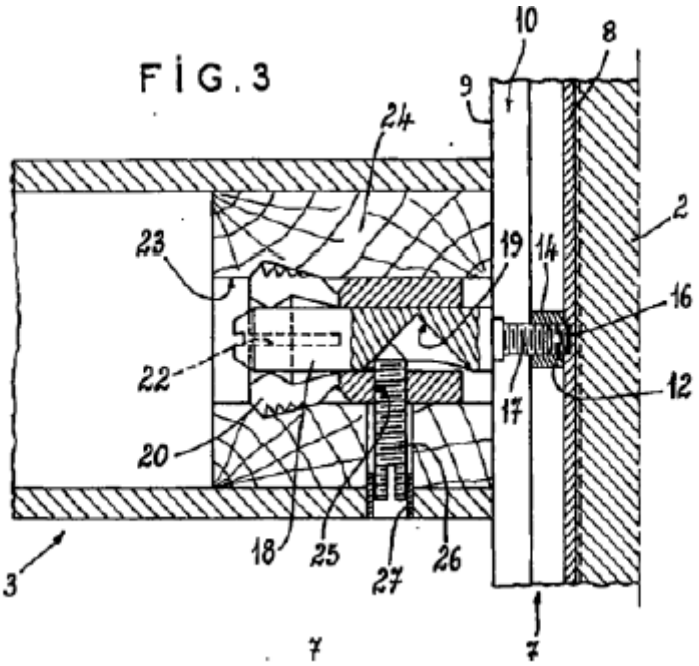

47 Open metal profiles (7) are embedded in the supporting walls (2). The side of the profile (8) facing the supporting wall is wider than the opposite side (9) and is provided with openings (12) spaced at equal intervals. An opening (10) is formed in the side (9) over the entire length of the profile. Nuts (14) are used to fasten the shelves (3), which at the same time should ensure the

strength of the entire shelf. Each nut is associated with a grub screw (16) that can engage in one of the openings (12) to position the nut at the desired height. The bolt (18) is screwed into the nut with the threaded shank (17) until it comes into contact with the outer surface of the metal profile with the part adjoining the threaded shank, the circumference of which is larger than the opening (10), and clamps the leg (9) of the metal profile. With the other end, the bolt is fixed in a sleeve (20), which is inserted in a hole (23) at the front end (24) of a shelf and is held there with the widening of the longitudinal slot located in its rear section, which is grooved on the outside. The sleeve is provided with a radially extending threaded hole (25) into which a threaded pin (26) can be screwed. This tensions the shelf with its front end against the vertical support wall to which the pin is attached (E1 p. 12-14).

48 (1) This discloses a non-visible fastening device comprising a bolt, a sleeve and clamping means. However, the subject matter of patent claim 1 in the version defended by the main application is not suggested to the skilled person by this.

49 (2) A tube within the meaning of feature 1.2.1 is not disclosed. However, even if one assumes with the plaintiff that the bolt (18) in E1 is comparable in its design and construction to the tube according to feature 1.2. 1 and further assuming that the interchanging of internal and external threads is an obvious measure for a skilled person, there is no disclosure of features 1.2.2 and 2.2.1. Instead of the bolt according to feature 1.2.2, only a nut is provided in the assembly group of the E1. Feature 2.2.1 is not realized in the mounting assembly of the E1 because the sleeve is not inserted in such a way that it abuts against an inner wall of the insertion base, which in this case would be regarded as the object to be mounted, but rather abuts against the profile on the supporting wall to which the object is to be attached. The wall of the hole (23) in the shelf to be mounted in the supporting wall does not constitute an inner wall of the object to be mounted in the sense of feature 2.2.1, but is at most comparable with the through hole mentioned in feature 2.1. Even if the term "inner wall" – as the plaintiff states – is not defined in more detail either in claim 1 of the patent in suit or in the description, it follows from the context that the side facing away from the wall on which the object is to be mounted is meant.

50 Against this background, it can be left open whether the sleeve (20) is to be regarded as a pre-assembly housing within the meaning of feature 3.1, which in any case would only be possible in the variant that the pre-assembly housing is formed in one piece with the sleeve.

51 (3) From E2, there was no suggestion for the skilled person to modify the arrangement of sleeve, bolt and nut in E1 in such a way that feature 2.2.1 is fulfilled.

52 c) Also the German utility model 91 14 083 (E3), the US patent specification 5 096 349 (E6), the German published application 198 09 856 (E7) and the German patent specification 195 09 408 (E8) do not contain any suggestion, taking into account the explanations of the Patent Court in its judicial indication under Sec. 83 Patent Act, to provide a pre-assembly housing corresponding to feature 3.1 in the building kit according to patent claim 1 in the version defended by the main request. Therefore, it is no longer relevant to the question whether the skilled person would have received the suggestion from the US patent specification 2 442 184 (E4) or from the European patent application 485 757 (E5) to replace the fastening means provided in E3, E6, E7 or E8 by the fastening mechanisms disclosed in E4 or in E5, which comprise bolt elements, tube pieces and clamping means similar to the patent in suit.

53 aa) German utility model 91 14 083 (E3) relates to a collar sleeve for a hanger bolt for wall-mounted fastening of a sanitary object. The hanger bolt engages with a wood screw thread in a dowel on one side. On the other side, which has a metric thread, it receives the sanitary object, which is pushed on via corresponding recesses. The subsequently fitted collar sleeve is provided with projections on the inside in order to hold the sanitary object in place temporarily and to secure it against slipping until the nut is screwed onto the hanger bolt.

54 Contrary to the opinion of the plaintiff, the collar sleeve is not a pre-assembly housing within the meaning of feature 3.1, since this, in contrast to the collar sleeve, does not serve to secure the sanitary object against slipping during assembly, but rather is intended to provide contact between the clamping sleeve and the object to be mounted in the sense that the sleeve is connected

sufficiently securely to the object as a clamping means. Against this background, it is no longer relevant to the question of whether, as the plaintiff contends, the skilled person would have received the suggestion from US patent specification 2 442 184 (E4) or from European patent application 485 757 (E5) to replace the nut provided as a fastening means in E3 with the fastening mechanism disclosed in E4 or in E5.

55 bb) US patent specification 5 096 349 (E6) discloses a nut fastening grommet as a substitute for a nut plate. This state of the art document addresses the problem of how to fit a threaded fastener, such as a bolt, in walls, which, like the walls in an aircraft, do not permit the use of a threaded hole. Instead of the nut plate used in this case, which has a nut with a threaded opening to receive a threaded stud, and requires the drilling of at least three openings in the wall (one as a passage for the stud and at least two for the fasteners to attach the plate to the wall), E6 proposes a nut fastener grommet that can be connected to the wall through a single opening. Apart from the fact that E6 thus concerns a technical problem, which is not the subject matter of the patent in suit, this document in particular does not disclose a pre-assembly housing within the meaning of feature 3.1. A suggestion in this respect also does not result from citations E4 and E5.

56 cc) German published application 198 09 856 (E7) relates to a building kit for fixing wall-mounted sanitary objects, which comprises an insulating sleeve made of soft-elastic material and other elements. The state of the art document describes it as its task to design a building kit in such a way that it can be manufactured with relatively little manufacturing effort and can be easily pre-assembled. Accordingly, the document only describes the construction of the building kit in the pre-assembled state, but does not deal with the question underlying the patent in suit concerning a fastening without visible fastening points, so that no suggestion for a retractable fastening device such as is the subject of the patent in suit results from this.

57 dd) The German patent specification 195 09 408 (E8) concerns a fastening element for the sound-insulated mounting of sanitary components. For this purpose, E8 proposes a bolt holder, which is designed as a collar sleeve with an internal and external thread on which a sound-insulating element is

arranged between the collar and a nut screwed onto the external thread. However, no indications as to how the sanitary object can be fastened to the wall without visible fastening points can be derived from this state of the art document. In particular, there is no suggestion to provide a pre-assembly housing according to feature 3.1.

58 IV. The decision on costs is based on Sec. 121(2), second sentence, Patent Act and Sec. 92(2) Code of Civil Procedure.

Grabinski Hoffmann Kober-Dehm

Rombach Rensen

Previous instance:
Federal Patent Court, judgment of December 7, 2017 – 7 Ni 15/16 (EP) –