Deckblatt Übersetzung

Daten der Übersetzung:

Court/Gericht:	Bundesgerichtshof
Date of Decision / Datum der Entscheidung:	2021-04-20
Docket Number / Aktenzeichen:	X ZR 40/19
Name of Decision / Name der Entscheidung:	Zahnimplantat

Arbeitskreis Patentgerichtswesen in Deutschland e.V.

FEDERAL COURT OF JUSTICE

IN THE NAME OF THE PEOPLE

JUDGMENT

X ZR 40/19

Pronounced on:
20 April 2021
Zöller
Judicial Secretary as
Clerk of the court
registry

in the patent nullity proceedings

Zahnimplantat/
Dental implant

EPC Art. 54(2), Art. 56

In individual cases, there may be reason to use pictorial representations of a registered design as a starting point for technical considerations.

Federal Court of Justice, judgment of 20 April 2021 - X ZR 40/19 –
Federal Patent Court

ECLI:DE:BGH:2021:200421UXZR40.19.0

The X. Civil Senate of the Federal Court of Justice, following the oral hearing on 20 April 2021, attended by the presiding judge Dr. Bacher, the judges Dr. Grabinski and Hoffmann, the judge Dr. Kober-Dehm and the judge Dr. Rensen

ruled that:

On appeal by the defendant, the judgment of the 4th Senate (Nullity Senate) of the Federal Patent Court of 4 December 2018, is amended.

The plaintiff's action is dismissed.

The plaintiff shall bear the costs of the proceedings.

By operation of law

Facts of the case:

1 The defendant is the proprietor of European patent 646 362 (patent in suit), which was granted with effect for the Federal Republic of Germany, was applied for on 20 September 1994, claiming priority from 21 September 1993, and relates to a screw implant for fastening dental prostheses. Patent claim 1, to which six further claims are referred back, was given the following wording in previous nullity proceedings (Federal Court of Justice, judgment of 25 April 2006 - X ZR 16/03) (the change from the granted version is highlighted):

> Screw implant for fastening dental prosthesis to the jaw, having an implant body which can be at least partially screwed into the jaw and in which a tool receiving means (86) for screwing in the implant is arranged and which has an outer surface which is at least partially provided at its lower part with an external thread for forming a threaded section (82) and has a thread-free head section (84) at an upper part, wherein between the head portion (84) and the threaded portion (82) is arranged a middle portion (83) with a thread of lesser depth <u>and cylindrical core</u>, characterized in that the tool receiving means (86) for screwing in the implant extends through the head portion (84) and at least over the major part of the middle portion (83) with the thread of lesser depth.

2 The plaintiff, who has a final conviction for infringement of the patent in suit, has argued that the subject matter of the patent in suit goes beyond the content of the application, is not patentable, and is not disclosed in such a way that a skilled person can carry it out. The defendant defended the patent in suit as amended and with three auxiliary requests.

3 The Patent Court declared the patent in suit null and void. This is the subject of the defendant's appeal, which defends the patent in suit with its first-instance claims and a new auxiliary claim. The plaintiff opposes the appeal.

Grounds of the decision:

4 The admissible appeal is well-founded and leads to the dismissal of the action.

5 I. The patent in suit concerns a screw implant for fastening dental prostheses to the jaw.

6 1. The patent in suit states that known screw implants, which are screwed into a prefabricated receiving hole in the jaw, are designed in the head area in such a way that crushing occurs during insertion. This could delay the healing of the implant in the jaw. In addition, the known screw implants often offer only insufficient hold.

7 2. Against this background, the patent in suit concerns the problem of providing a screw implant that can be easily inserted into the jaw and heals there both quickly and firmly.

8 3. The patent in suit proposes a screw implant, the features of which can be divided as follows:

1. Screw implant for fixing dental prosthesis to the jaw with an implant body that can be at least partially screwed into the jaw.
2. The outer surface of the implant body has three sections, namely
   - 2.1 a lower part which is at least partially provided with an external thread to form a threaded section (82),
   - 2.2 an upper portion formed by a threadless head portion (84),
   - 2.3 a middle section (83) arranged between the head section (84) and the threaded section (82) and having
     - 2.3.1 a thread of smaller depth
     - 2.3.2 and a cylindrical core.

3. In the interior of the implant body a tool holding means (86) is arranged for screwing in the implant, which extends

3.1 through the head section (84) and

3.2 extends at least over most of the central section (83) with the thread of lesser depth.

9 4. The Senate has already dealt with the interpretation of these features in the first nullity proceedings. It adheres to this.

10 II. The Patent Court has substantiated its decision essentially as follows:

11 The European patent application 424 734 (NK7) was neither novelty-damaging with regard to the embodiment shown in Figure 1 nor with regard to the embodiment shown in Figure 8. The embodiment according to Figure 1 shows a screw implant for use in the jaw for fastening dental implants. However, it lacked a central section with a shallow thread. The embodiment according to Figure 8 is not suitable for fastening dental prostheses to the jaw and does not have a tool holder within the meaning of feature group 3.

12 However, the subject matter of patent claim 1 had been suggested to the skilled person, an engineer specializing in mechanical engineering or medical technology with knowledge of materials and a dentist with practical experience in implantology, on the basis of the French design application 932249-011 (NK11V). NK11V discloses a screw device for fastening a dental implant, which, with the exception of features 2.3.1 and 2.3.2, realizes all features of patent claim 1. The state of the art also included screw implants whose upper region was either conical or cylindrical. For example, the dental screw implants known from NK7, the US patent specification 5 195 892 (NK9) and the Spanish industrial model I0123609 (NK10) each showed an upper region that was cylindrically shaped, while the US patent specification 5 000 686 (referred to as K3 in the first nullity proceedings) cited as state of the art in the patent in suit showed a dental screw implant with a conical upper region. It was known to the skilled person that in the case of a screw implant with a conical upper region, an unfavorable pressure was exerted in the axial direction on the cortical or

marginal region of the jaw bone, as was also mentioned in NK7 with regard to the embodiment shown there in Figure 1. This leads to the suggestion that the implant shown in NK11V should also have a cylindrical shape for the central section, which already has a thread of lesser depth. This section would then inevitably also have a cylindrical core.

13 The additional features of the auxiliary requests were either to be taken from the NK11V or represented purely technical measures by the skilled person.

14 III. This assessment does not stand up to review in the appeal proceedings.

15 1. As the Patent Court correctly pointed out, the invention is disclosed in such a way that a skilled person can carry it out, and the subject matter of claim 1 does not go beyond the content of the original application.

16 2. The subject matter of patent claim 1 is not fully disclosed in NK7.

17 a) NK7 discloses means for fixation of prostheses to bone and sets out to achieve better retention by reducing surgical trauma and by maximizing initial congruency with minimal pressure. The citation shows various embodiments for different purposes.

18 aa) The embodiment example shown in Figure 1 reproduced below shows a screw implant which is particularly suitable for dental purposes (Column 15 lines 44-47). It can be screwed into the jawbone and receive a dental prosthesis (Column 16 lines 36-42).

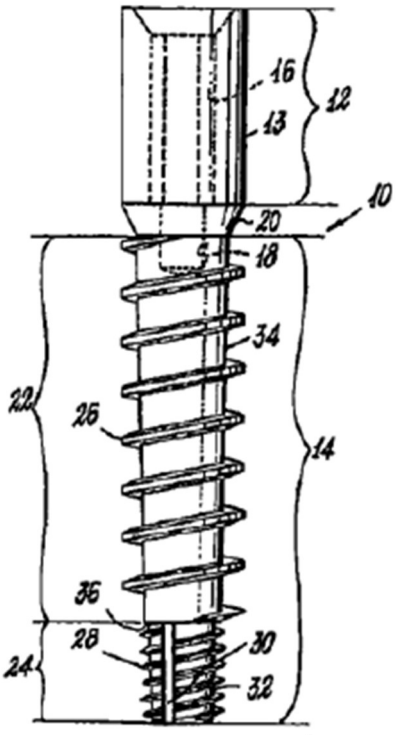

Fig. 1

19 The outer surface of this implant has a self-tapping thread (28) on its lower, cone-shaped shank (14) and a screw thread (26) adjoining it, the outer diameter of which is constant over the entire length and corresponds to the diameter of the cylindrical and threadless head section (12) (Column 16 line 56 to Column 17 line 44). On the upper side of the head section (12), a prism-shaped recess (16) is provided, indicated by dashed lines in Figure 1. This allows the implant to be screwed into the bone (Column 16 lines 36-42). This tool holding means, however, does not extend over the major part of a central section according to feature 3.2.

20 Thus, features 1 to 2.3.1 as well as features 3 and 3.1 are disclosed, but not features 2.3.2 and 3.2.

21 bb) The example of an embodiment shown in Figure 8 reproduced below shows a screw which is particularly suitable for orthopaedic purposes (Column 18 lines 6 f.).

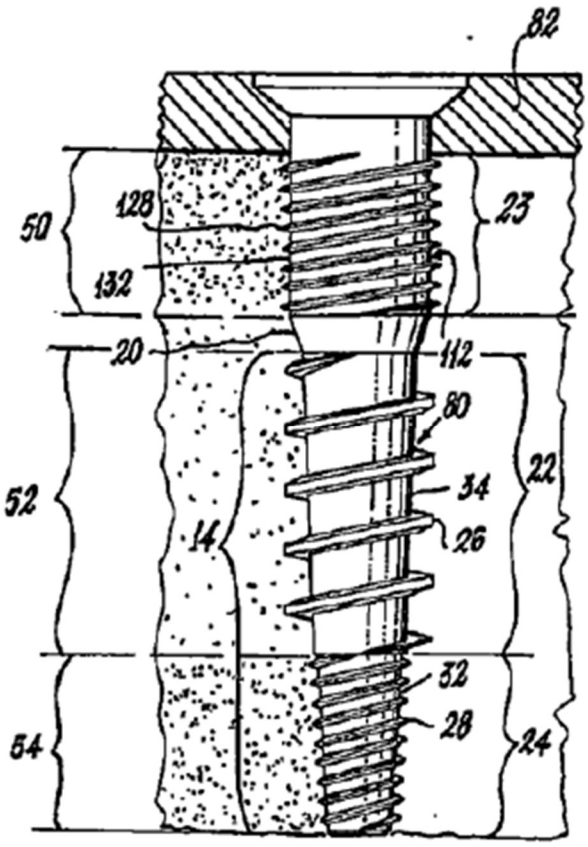

Fig. 8

22 This implant differs from the embodiment in Figure 1 only by a third thread (23) on the outer surface of the head section (112) (Column 21 lines 12-19). This thread can only be provided if a counter element (82) is applied, such as a plate resting on the outer layer (50) of the femur. The plate prevents outer layers of the outer layer (50) from lifting and being damaged when the self-tapping thread (23) engages the outer layer (50) (Column 21 line 2026). The thread (23) can also be non-self-tapping. In that case, an internal thread must be formed in the corresponding area of the bone using a tap (Column 21 lines 27-30).

23 Thus, feature group 2 as well as features 3 and 3.1 are disclosed, but not features 1 and 3.2.

24 3. The subject matter of claim 1 is not suggested by the citations used by the Patent Court.

25 a) The Patent Court correctly assumed that a central section with a thread and a cylindrical core for an implant suitable for fixing dental prostheses to the jaw is not suggested by NK7.

26 Reason for such a combination could arise from NK7 at most if it were evident that the embodiment shown in Figure 8 is also suitable for fastening dentures to the jaw beyond the intended use indicated in NK7. The latter is contradicted by the explanations according to which the third thread can only be used together with a counter element (82). The fact that such a counter element could also be attached to an implant for fastening dentures to the jaw is neither asserted nor otherwise evident. Whether other uses on the jaw are possible can be left open, because a suitability for this is not sufficient for the realization of feature 1.

27 The statements according to which the thread (23) can also be non-self-tapping do not lead to a different assessment in this respect. It cannot be inferred from them that in this case a counter element (82) is dispensable. The cutting of a thread is also necessary in this constellation, as NK7 expressly clarifies.

28 b) Contrary to the opinion of the Patent Court, such a design is also not suggested on the basis of NK11V.

29 aa) In its approach, the Patent Court correctly assumed that NK11V can be considered as a starting point for the search for screw implants with improved technical properties.

30 (1) Contrary to the opinion of the appeal, it is irrelevant whether NK11V is the closest state of the art.

31 According to the case law of the Senate also cited by the appeal in another context, the classification of a citation as - from an ex-post point of view - the closest state of the art is neither sufficient nor necessary for the affirmative answer to the question whether the citation constitutes a suitable starting point for technical efforts (Federal Court of Justice, judgment of 16 December 2008 - X ZR 89/07, BGHZ 179, 168, GRUR 2009, 382 marginal no. 51 - Olanzapin; Federal Court of Justice, judgment of 18 June 2009 - Xa ZR 138/05, GRUR 2009, 1039, marginal no. 20 - Fischbissanzeiger; judgment of 31 January 2017 - X ZR 119/14, GRUR 2017, 498 marginal no. 28 - Gestricktes Schuhoberteil).

32 (2) Contrary to the opinion of the appeal, the publication of a

registered design can also constitute a suitable starting point for technical considerations.

33 (a) The Senate has - without problematizing the issue - already on various occasions used design patents and registered designs as a possible starting point for assessing inventive step (see Federal Court of Justice, judgment of 13 December 2011 - X ZR 135/08 marginal no. 36; judgment of 5 October 2016 - X ZR 78/14, GRUR 2017, 148 marginal no. 53 f. - Opto-Bauelement; judgment of 18 December 2018 - X ZR 37/17, GRUR 2019, 499 marginal no. 47 - Eierkarton).

34 (b) This approach is in line with Article 54(2) EPC and the case law of the Senate based thereon on the disclosure content of drawings in patent applications.

35 According to Art. 54(2) EPC, the state of the art is everything which has been made available to the public before the priority date by written or oral description, by use or in any other way. This includes not only textual but also pictorial representations. Particularly in connection with the question of whether the subject matter of a patent is originally disclosed, the Senate has therefore repeatedly ruled that technical features may also be disclosed solely by the drawings contained in a patent application (see, for example, Federal Court of Justice, judgment of 18 February 2010 - Xa ZR 52/08, GRUR 2010, 599 marginal no. 22 - Formteil; judgment of 24 January 2012 - X ZR 88/09, GRUR 2012, 475 marginal no. 32 - Elektronenstrahltherapiesystem).

36 (c) A comparable disclosure content may also result in individual cases from drawings or pictorial representations in the published documents of a registered design.

37 As a rule, such documents do not contain any express statements on technical aspects. However, they may nevertheless have a technical disclosure content if technical relationships or functions are already apparent from the pictorial representation.

38 This applies in particular to technical features that can be perceived by merely looking at a product. Whether such features are made accessible by

offering and supplying such products or by publishing visual representations with comparable disclosure content does not justify a fundamental difference. In view of this, there may be reason in individual cases to use as a starting point for technical considerations not only products available on the market, but also illustrations of such products in the documents of a registered design.

39 (3) In the case in dispute, there was reason to use NK11V as a starting point for considerations on the improvement of screw implants for dental prostheses.

40 NK11V concerns a fastening for dental treatment. This is shown in the following figures:

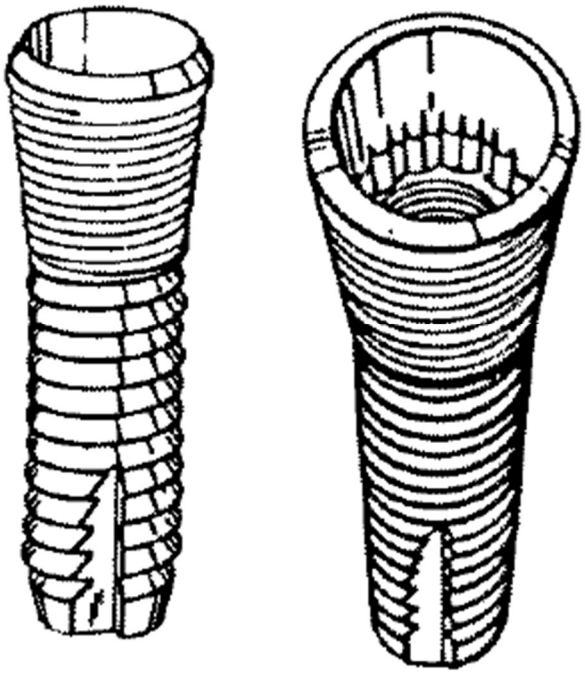

41 From these illustrations, the first of which corresponds to Figure 1 of the application WO 94/09717 (and the European patent 668 751, NK4, resulting therefrom) published after the priority date but having priority earlier, findings on the shape of the individual components of the implant and the threads formed thereon can be obtained even without additional explanations.

42 bb) The drawings reproduced above show a screw-in fastening device comprising a short threadless part at the top and two differently shaped threads

arranged underneath, of which the lower thread is guided around a cylindrical core and the upper thread around a conical core. The second illustration further shows an opening at the top that extends into the section with the upper thread and has a ring of indentations in its lower region. In contrast, further details, in particular the thread depth, are not clearly visible.

43 cc) Thus, features 1 to 2.1 as well as features 2.3 and 2.3.1 are disclosed.

44 dd) Furthermore, the Patent Court rightly considered feature 2.2 as disclosed.

45 Contrary to the view of the appeal, the first figure, notwithstanding the fact that it cannot be regarded as a drawing to scale, clearly shows that the inwardly beveled area at the top of the device is not merely an edge resulting from the run-out of the thread. The height of this area is significantly greater than the distance between two threads.

46 ee) Contrary to the opinion of the Patent Court, feature 3, on the other hand, is not directly and unambiguously disclosed.

47 In view of the fact that the two illustrations recognizably show only a few design elements, however, it seems rather remote that the structures shown in the lower area of the opening merely reflect reflections or other graphic designs. Even if the illustrations reproduce a design, the better reasons speak rather in favor of the interpretation that it is a matter of the representation - even if only schematic - of an element essential for the function.

48 Even against this background, however, the second illustration - which does not correspond to Figure 2 from NK4 - does not clearly indicate whether it is a means intended to enable the device to be screwed into the jaw or markings intended to ensure the correct alignment of the denture to be inserted into the sleeve. The fact that the structures could serve both purposes at the same time cannot be ruled out, but it is also not clearly disclosed.

49 ff) As the plaintiff also does not dispute, there is also a lack of disclosure of feature 2.3.2.

50 The upper thread area is recognizably cone-shaped in both figures.

51 gg) Contrary to the opinion of the Patent Court, it was not suggested on the basis of NK11V to replace the conical thread area by a cylindrical thread area and to design this with a smaller thread depth than the likewise cylindrical lower thread area.

52 (1) No sufficient suggestion for such a change resulted from the circumstance established by the Patent Court that both a conical and a cylindrical shaping of the upper part were known from the state of the art.

53 Even if different designs were known, it did not follow from this that individual design elements could be interchanged with each other at will.

54 (2) From the circumstance that a screw implant with a conical upper part can exert an unfavorable pressure on the jaw bone, as is stated in NK7 (Column 16 lines 28-35), there was also no suggestion for a design according to features 2.3.1 and 2.3.2.

55 NK7 draws the conclusion from the above-mentioned circumstance that it would be more favorable to avoid any axial force effect in the area of the screw head (12) and to design it in such a way that it can only transmit radial forces to the jaw (Column 16 lines 28-35). This did not result in any reason to attach a thread in this area. This is all the more true since NK7, as already explained above, considers a thread in this area to be possible only in the case that a counter element (82) is present.

56 In order to arrive at the subject matter of the patent in suit, the skilled person would have had to isolate individual aspects from NK11V as well as from NK7 and his general knowledge and combine them in a new way. This required a specific suggestion. Such a suggestion is neither found in the mentioned citations nor elsewhere.

57 c) At the appeal hearing, the plaintiff argued that the subject matter of claim 1 had been obvious from NK9 in combination with general technical knowledge. This has to be disagreed with.

58 aa) NK9 concerns a dental implant system with an implant to be

anchored in the jaw bone. The following Figures 1 and 2 show an example of this; the further Figure 9 shows a tool key for screwing in the implant.

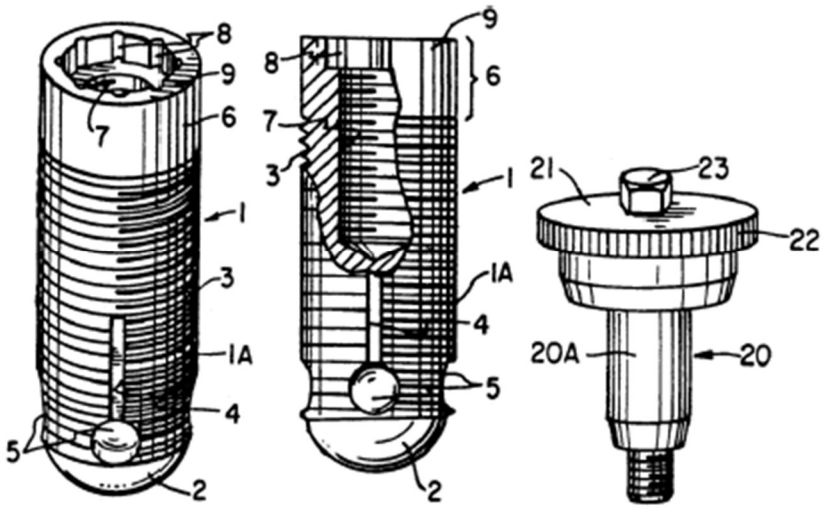

59 Implant 1 has a cylindrical body and a hemispherical dome section at its lower end. The cylindrical body is externally threaded 3 along almost its entire length, but a smooth neck portion 6 is provided at the top (NK9 Column 2 lines 17-22). Inside the cylindrical body is an internally threaded hole 7 and above it a cylindrical cavity with fluting 8 (Column 2 lines 37-42). For screwing in the implant, a tool key 20 is attached by means of a screw 23, so that the implant can be manually screwed into the jaw bone provided with a bore via the fluting 22 (Column 3 lines 22-31).

60 bb) Thus, features 1 to 2.2 as well as 3 and 3.1 are disclosed, but not feature group 2.3.

61 cc) Contrary to the opinion of the plaintiff, there was no reason to provide the implant disclosed in NK9 with a central section in which the cylindrical thread has a smaller depth than in the section below.

62 Such a design was indeed objectively possible. However, neither from NK9 nor from other circumstances was there a sufficient suggestion for such a modification.

63 IV. The decision does not prove to be correct in its result for other reasons (Sec. 119(1) Patent Act).

64 As already stated by the Patent Court in its reference under Sec. 83(1) Patent Act, no further suggestions result from the other objections.

65 V. The legal dispute is ripe for decision (Sec. 119(5) sentence 2 Patent Act).

66 The patent in suit proves to be legally valid for the reasons stated above.

67 VI. The decision on costs is based on Sec. 121(2) Patent Act and Sec. 91(1) Code of Civil Procedure.

Bacher Grabinski Hoffmann

Kober-Dehm Rensen

Previous instance:
Federal Patent Court, judgment of 4 December 2018 – 4 Ni 60/16 (EP) –