Deckblatt Übersetzung

Daten der Übersetzung:

Court/Gericht:	Bundesgerichtshof
Date of Decision / Datum der Entscheidung:	2021-03-02
Docket Number / Aktenzeichen:	X ZR 17/19
Name of Decision / Name der Entscheidung:	Schnellwechseldorn

Arbeitskreis Patentgerichtswesen in Deutschland e.V.

FEDERAL COURT OF JUSTICE

IN THE NAME OF THE PEOPLE

JUDGMENT

X ZR 17/19

Pronounced on:
2 March 2021
Anderer
Judicial Secretary as
Clerk of the court
registry

in the patent nullity proceedings

Schnellwechseldorn/
Quick change arbor

EPC Art. 69; Patent Act Sec. 14

If in the description of a patent a known state of the art is described as disadvantageous and a feature provided for in the patent claim is highlighted as a means to overcome this disadvantage, this feature is in case of doubt not to be understood as being reflected in that state of the art from which it is precisely intended to differ (supplement to Federal Court of Justice, judgment of 27 November 2018 X ZR 16/17, GRUR 2019, 491 marginal no. 19 - Scheinwerferbelüftungssystem).

Federal Court of Justice, judgment of 2 March 2021 - X ZR 17/19 –
Federal Patent Court

ECLI:DE:BGH:2021:020321UXZR17.19.0

The X. Civil Senate of the Federal Court of Justice, following the oral hearing on 2 March 2021, attended by the presiding judge Dr. Bacher, the judges Dr. Grabinski, Hoffmann and Dr. Deichfuß as well as the judge Dr. Marx

ruled that:

On appeal by the defendant and dismissal of the cross-appeal, the judgment of the 5th Senate (Nullity Senate) of the Federal Patent Court of 30 October 2018, is amended.

The action is dismissed.

The costs of the legal dispute shall be borne by the plaintiff.

By operation of law

Facts of the case:

1 The defendant is the proprietor of European patent 1 827 741 (patent in suit), which was granted with effect for the Federal Republic of Germany, was applied for on 10 December 2004 and relates to a quick-change and drill core ejection spindle for a hole saw.

2 Patent claim 1, to which 15 further claims are referred back, reads as granted in the language of the proceedings:

> A quick-change arbor (1) for a tool (2) comprising:
>
> > a longitudinal body (3) having a drive end (4) and a tool end (5);
> >
> > means for attaching (6) the tool (2), which attachment means (6) are slidably releasable from the longitudinal body (3) and are provided with:
> >
> > > a central hole (7) allowing a sliding of the attachment means (6) over the longitudinal body (3), and
> > >
> > > means for rotationally (8; 8-1, 8-2) and axially (9; 9-1, 9-2) locking the attachment means (6) to the longitudinal body (3),
>
> characterized in that the axially locking means (9) comprise:
>
> > first axially locking means (9-1) embodied by a latch, in particular a transverse latch, provided on the attachment means (6), and
> >
> > second axially locking means (9-2) embodied by a notch, in particular a transverse notch, provided on the longitudinal body (3) for locking the latch (9-1) therein.

3 Patent claim 17, to which a further claim is referred back, protects means for fastening a tool with corresponding features, patent claim 19 a system for changing tools comprising a spindle according to any of claims 1 to 16.

4 The plaintiff has argued that the subject matter of the patent in suit is not patentable. The defendant has defended the patent right as granted and with seven auxiliary requests in amended versions.

5 The Patent Court declared the patent in suit null insofar as its subject matter extended beyond the version defended by auxiliary request 2, and dismissed the action for the rest. The defendant's appeal and the plaintiff's cross-appeal are opposed to this, both of which continue to pursue their first-

instance claim in its entirety.

Grounds of the decision:

6 The appeal and the cross-appeal are admissible. The appeal is also successful on the merits. The cross-appeal, on the other hand, is unfounded.

7 I. The patent in suit relates to a quick-change and drill core ejection spindle and a method for actuating a quick-change mandrel.

8 1. According to the description, mandrels suitable for holding a drill bit and, coaxially therewith, a hole saw, and enabling attachment to a drilling machine were known in the state of the art. Conventional designs for this purpose had a holder which received the drill bit in an axially extending opening of the quick-change device and secured it in the axial direction by means of a clamping screw. The hole saw is fastened to the holder of the quick-change device by means of a threaded connection or a bayonet catch. This design was complex and costly to manufacture (para. 3 f.).

9 2. Against this background, the patent in suit concerns the technical problem of providing a constructively and functionally simplified mandrel which is simpler and less expensive to manufacture.

10 3. In order to solve this problem, the patent in suit proposes a device whose features can be divided as follows:

1 A quick-change mandrel (1) for a tool (2), comprising

2 a longitudinal body (3) having

- a a drive end (4); and
- b a tool end (5);

3 Means (6) for securing the tool (2),

- a which are slidably detachable from the longitudinal body (3) and have the following components:
- b a centrally located hole (7) which allows the fastening means (6) to be slid over the longitudinal body (3);
- c means (8; 8-1, 8-2) for locking the fastening means (6) to the longitudinal body so that they cannot rotate;
- d means (9; 9-1, 9-2) for axially locking the fastening means (6) to the longitudinal body (3).

4 The axial locking means (9) comprise first axial locking

means (9-1),

a which are provided as a latch, in particular as a transverse latch, and

b are formed on the fastening means (6), and

5 second axial locking means (9-2),

a which are provided as a notch, in particular as a transverse notch, and

b are formed on the longitudinal body (3) for locking the pawl (9-1) therein.

11 4. The tool changing system according to patent claim 19 comprises a quick-change mandrel according to claim 1 and is therefore subject to the same assessment.

12 5. The fastening device according to claim 17, on the other hand, has only features 3 to 5b. It is nevertheless subject to the same assessment.

13 6. According to the statements of the Patent Court, which are not objected to by the parties, a qualified engineer (FH) in the field of mechanical engineering, who is familiar with the design and development of drilling tools, is to be regarded as a skilled person.

14 7. The means (6) for fastening a tool specified in feature groups 3, 4 and 5 are of central importance.

15 a) According to features 3 a and 3 b, the fastening means (6) are detachable from the longitudinal body (3) and axially displaceable over it.

16 Detachable in the sense of feature 3 a is the connection between the fastening means (6) and the longitudinal body (3) if the two parts can be separated from each other in a simple manner for removal of the tool.

17 Contrary to the opinion of the plaintiff, it is not sufficient for the realization of this feature if the fastening means (6) can be detached from the longitudinal body (3) for maintenance or repair purposes.

18 According to feature 3 a, the possibility to loosen and move the fastening means (6) serves the purpose of fastening the tool (2) to the longitudinal body (3). Therefore, this possibility must be used when the tool is fastened or

removed in connection with its use.

19 This understanding is consistent with what is stated in the description of the patent in suit.

20 In describing the state of the art, the patent in suit deals with international patent application WO 01/38028 (K4). The device disclosed there for fastening a hole saw and a pilot drill has a displaceable selector sleeve which allows rapid coupling and uncoupling of the hole saw and pilot drill, but is firmly connected to the tool end of the mandrel (para. 3). The patent in suit describes this design as too complex (para. 5). Among other things, the detachability of the fasteners is emphasized as a means of improvement (para. 7).

21 From this it must be concluded that a fastener is detachable in the sense of feature 3 a only if it can be detached from the mandrel not only for repair and maintenance purposes, but also during the process intended for removal of the tool.

22 If, in the description of a patent, a known state of the art is equated with the generic term of a patent claim, no understanding is to be attributed to the features of the characterizing part in case of doubt, according to which these are to be found in that state of the art from which they are precisely intended to differ (Federal Court of Justice, judgment of 27 November, 2018 - X ZR 16/17, GRUR 2019, 491 marginal no. 19 - Scheinwerferbelüftungssystem).

23 In the case in dispute, feature 3 a is admittedly not part of the distinctive part of the patent claim. However, it can be inferred from the indicated explanations in the description that the patent in suit also wants to distinguish itself with this feature from the state of the art art disclosed in K4. Therefore, in case of doubt, this feature must also be interpreted in such a way that it is not found in K4.

24 b) As the appeal rightly asserts, claims 1 and 17 are further to be interpreted as meaning that the longitudinal body (3) must transmit the torque required for the intended use to the tool.

25 Although this does not follow from the requirement of a drive end and a

tool end provided in feature group 2, it does follow from features 3 d and 3 c - equally contained in patent claims 1 and 17.

26 Features 3 d and 3 c provide not only for axial locking of the tool, but also for locking against rotation, not on any components, but on the longitudinal body (6). According to the description of the patent in suit, this twist-proof locking has the function of transmitting the torque required for use to the tool.

27 c) According to feature groups 4 and 5, the means for axial latching consist of a latch formed on the fastening means (6) and a notch formed on the longitudinal body (3).

28 As the Patent Court correctly pointed out and without objection by the parties, a latch in this sense is not only to be regarded as a rotatably mounted locking element as shown in Figure 1 of the patent specification in dispute, but as any component which, by cooperating with a notch, permits releasable fixing in the axial direction.

29 d) Patent claim 1, as the Patent Court also correctly assumed, does not contain any specifications regarding the type of tool (2) for which the fastening means (6) must be suitable.

30 aa) In the embodiment example described in the patent in suit, the tool (2) is a hole saw (para. 13). Furthermore, the tool end (5) has an axial opening into which the drive end (15) of a guide drill (14) or other tool can be inserted (para. 20). This embodiment example is shown in Figure 1 reproduced below.

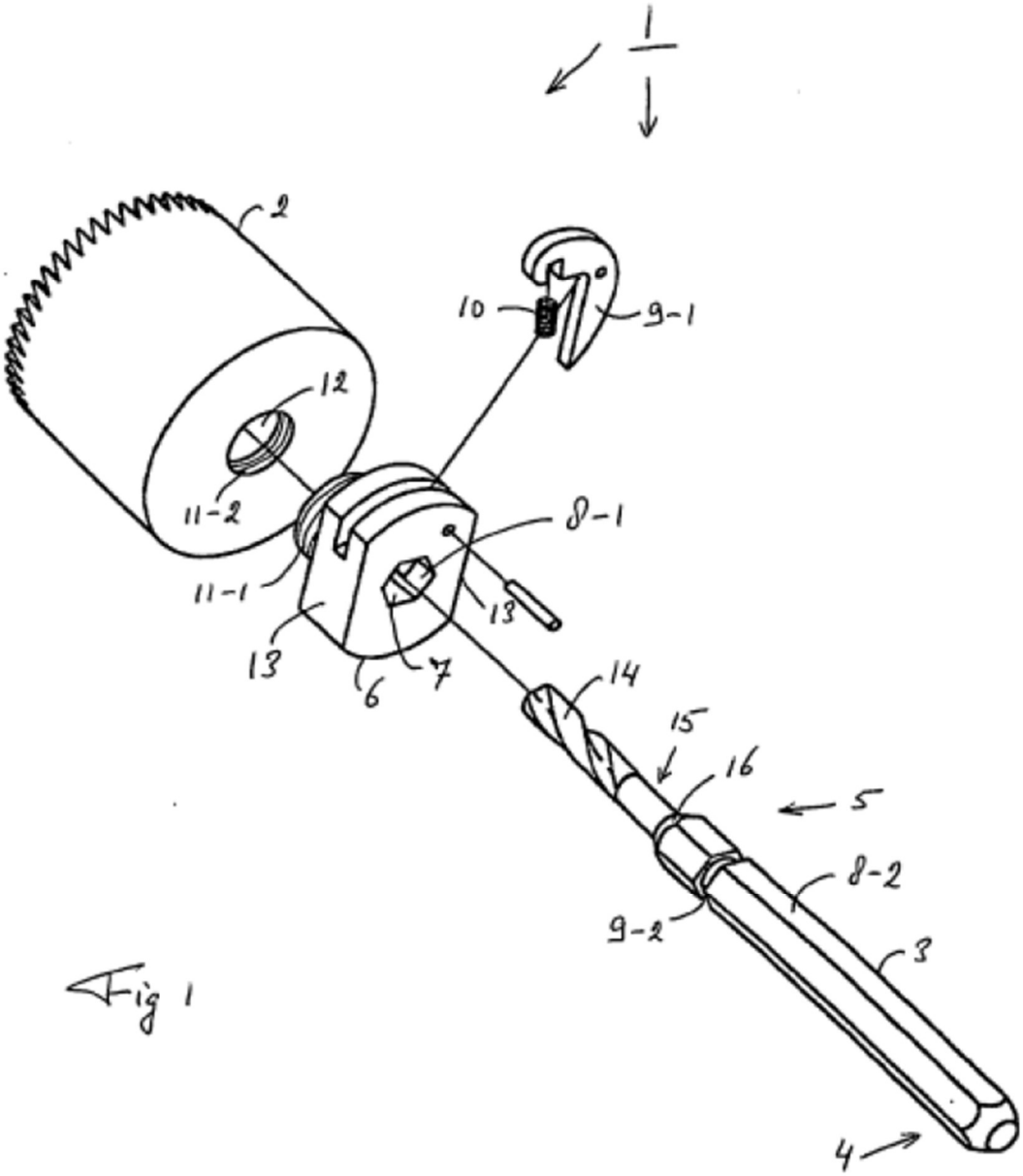

Fig 1

31 bb) Not all of these features have found expression in patent claim 1.

32 According to patent claim 1, it is sufficient if the mandrel has the means (6) provided in feature groups 3, 4 and 5 for fastening a tool (2). This tool need not necessarily be a hole saw. Alternatively, as the description expressly indicates, a cutting tool, a circular saw, a drill, a polishing disc or polishing layer, a brush, a drilling tool, a grinding tool, a grindstone or a similar tool may be considered (para. 13). A means for receiving a second tool is not excluded under patent claim 1, but is also not mandatory.

33 cc) As the appeal correctly asserts in its approach, feature groups 3,

4 and 5 are fulfilled in the embodiment example shown in Figure 1 only with respect to the fastening means (6) for the hole saw (2). In contrast, the opening provided for receiving the guide drill is not displaceable and also does not reveal any axial locking means in the sense of feature 3 d and feature groups 4 and 5.

34 However, this does not preclude the fastening means specified in feature groups 3, 4 and 5 from being designed in such a way that they can exclusively receive a drill or other tool.

35 dd) The fact that K4, which is assessed as state of the art in the description of the patent in suit, discloses a fastening means for a hole saw and that the patent in suit aims at further developing a device of this kind does not lead to a different assessment against the background shown.

36 It is true that the features provided in claim 1 make it possible to design a receptacle for a hole saw in a simple and expedient manner. However, the claim is not limited to this. Rather, it protects any device for holding a tool that has the features provided. These features do not include that the fastening means are designed for a hole saw.

37 ee) The statements in the description according to which the pilot drill (14) can also be contained in one piece in the longitudinal body (3) (para. 8, para. 23) do not lead to a different assessment.

38 Thus, likewise, only an optional embodiment is shown, which is not compulsorily provided for in patent claim 1. Therefore, no restrictive interpretation of the patent claim results from the explanations cited by the appeal, according to which this embodiment is particularly advantageous (para. 8, column 2, lines 4-7).

39 II. The Patent Court, insofar as it is of interest for the appeal proceedings, essentially gave the following reasons for its decision:

40 The subject matter of patent claim 1 was anticipated by the German utility model specification 201 13 578 (K8). K8 discloses a cylindrical drilling tool in which a hole saw can be detached from a mandrel and exchanged without tools. Features 1 to 3 d were thus disclosed. The means for fastening would consist

of a housing, a drum and a ball. These could be removed from the longitudinal body together with the drum after the ball detent had been released. They have a central hole which allows them to be slid over the longitudinal body. The hexagonal blind hole in the drum ensures non-rotational locking of the fasteners to the longitudinal body, which cooperates with the hexagonal drive end of the longitudinal body. A further ball and a notch formed means for axial locking within the meaning of feature groups 4 and 5.

41 III. This assessment does not withstand the attacks of the appeal.

42 1. Contrary to the opinion of the Patent Court, the subject matter of the granted version of claim 1 is not fully disclosed in K8.

43 a) K8 discloses a drilling tool with a hole saw and a pilot drill. An example of an embodiment is shown in Figure 1 reproduced below.

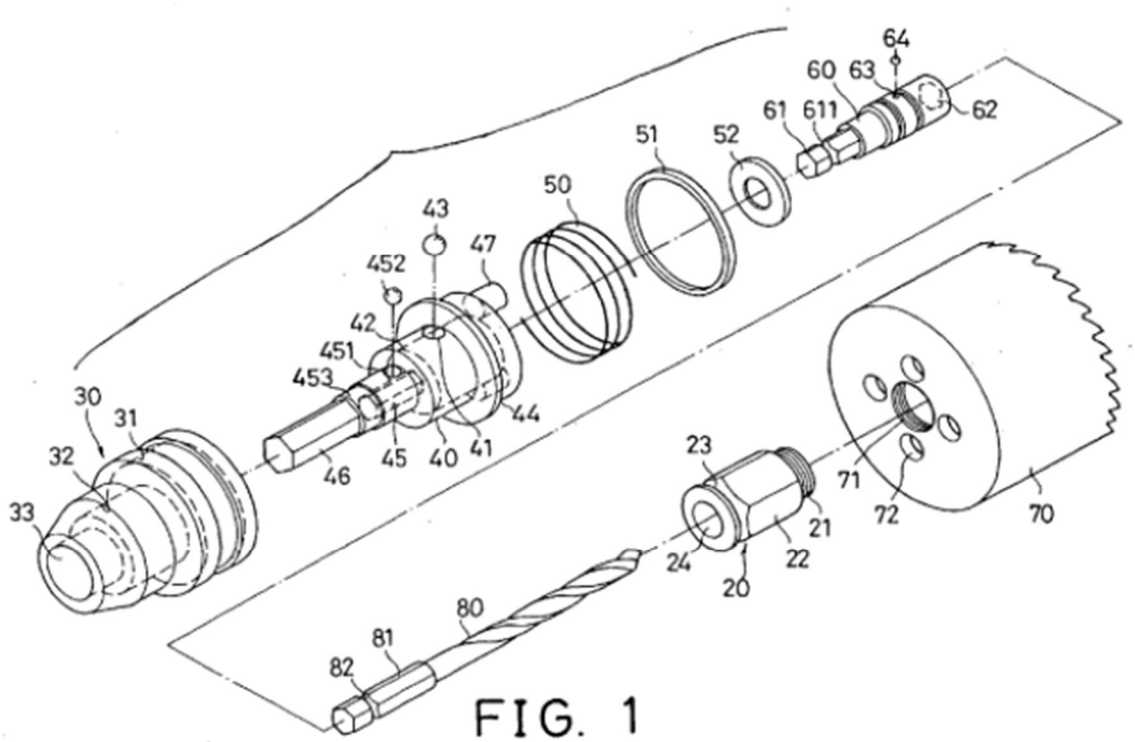

FIG. 1

44 The boring tool includes a housing (30) with a bore (33) and a chamber (32). An opening (31) is provided for rotatably receiving three sections of a drum (40) having different diameters.

45 The drum has a shaft (46) that extends out of the housing (30) when inserted and two chambers (42, 45). Two openings (41, 451) communicating with the chambers (42, 45) allow two balls (43, 452) to be received (p. 1 para. 6). The drum (40) also has a circumferential flange (42) for supporting a spring (50) and one or more projections (47). A ring (51) is attached to the housing (30) and engages a spring (50) to apply a force from the housing (30) to the shaft (46) through which the boring tool is driven (p. 2 para. 1).

46 A shaft (60) has a journal (61) secured in the chamber (45) of the barrel and having an annular groove (611) for receiving and engaging a ball (452). A recess (62) is provided to receive one end (81) of the drill (80). A ball (64), located in a recess (63) provided on the shaft (60) and engageable with a groove (82) provided on the drill (80), serves to secure it (p. 2 para. 2).

47 A hollow cylindrical drill (70) can be connected to a sleeve (20) by means of a screw hole (71). This sleeve can be displaced over the drill (80) and the shaft (60) so that its hexagonal base body (22) can be inserted into the chamber (42) and locked by means of an annular groove (23) and the ball (43) (p. 2 par. 3). Projections (47) of the drum (40) can be engaged with openings (72) of the hollow cylindrical drill (70) to ensure safe rotation of the same (p. 2 par. 5).

48 To change the drills (70, 80), the housing (30) can be moved relative to the drum (40) against the force of the spring (50). Then the balls (452, 43, 64) are out of engagement so that the two drills are decoupled. When the housing (30) is released, the balls engage the shaft (60), the sleeve (20) and the drill (80) (p. 2 par. 4). These two positions of the housing (30) are shown in Figures 3 and 2 reproduced below.

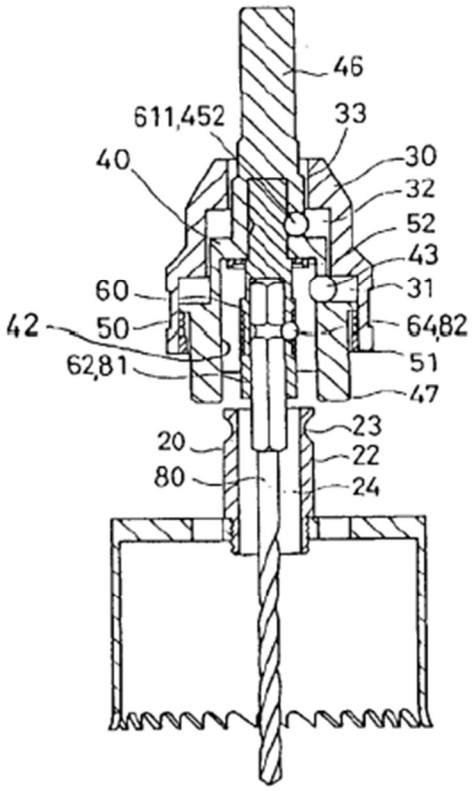

FIG. 3

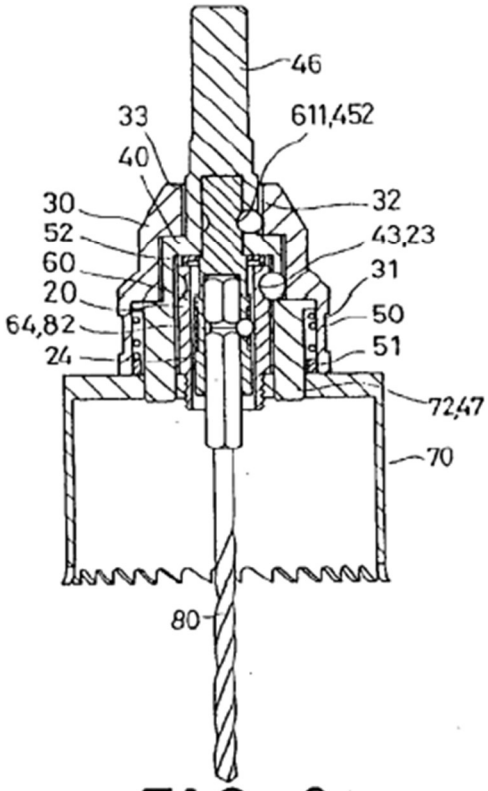

FIG. 2

49 b) Thus, as the appeal does not doubt, feature 1 is disclosed.

50 c) The shaft (60) in K8 can be regarded as a longitudinal body in the sense of feature 2, as the Patent Court correctly saw in the approach.

51 The shaft (60) has two ends, one of which points to the tool and the other to the drive.

52 d) As the Patent Court has correctly pointed out in this respect, the housing (30), the drum (40), the ball (43) and the spring (50) together with the sleeve (20) form means for fastening the hollow cylindrical drill body (70) in the sense of feature 3.

53 The hole (24) formed in the sleeve (20) and the two chambers (42, 45) of the drum (40) allow these means to be axially displaced over the shaft (60). The hexagonal cross-section of the shaft (60) and the openings produce a rotationally fixed lock in the sense of feature 3 c. The ball (452) provided in the drum (40) and the annular groove (611) provided on the shaft (60) provide axial

locking in accordance with feature 3 d and feature groups 4 and 5.

54 e) Contrary to the opinion of the Patent Court, however, there is in any case no transmission of force from the longitudinal body (3) to the tool (2) as required by features 3 c and 3 d.

55 aa) As the Patent Court did not fail to recognize, the torque generated by the drive in the device disclosed in K8 is not transmitted through the shaft (60) and thus not through the longitudinal body within the meaning of feature 2 to the hollow cylindrical drill (70), but through the shank (46) and the barrel (40).

56 bb) Contrary to the opinion of the Patent Court, this is not sufficient to realize the frictional connection required by features 3c and 3d.

57 As already explained above, the tool (2) in the sense of feature 3 does not necessarily have to be a hole saw or a hollow cylindrical drill in the sense of K8. However, it is absolutely necessary that the force is transmitted from the longitudinal body (3) to the tool which is attached to it in accordance with feature groups 3 to 5.

58 These requirements are not present in the device disclosed in K8, neither with respect to the hollow cylindrical drill (70) nor with respect to the drill (80).

59 The hollow cylindrical drill (70) is indeed connected to the shaft (60) in the manner shown above. However, as explained above, the shaft (60) does not transmit the torque of the prime mover to this drill.

60 The drill (80) is indeed driven by the shaft (60). However, it is not connected to it according to the specifications of feature groups 3 to 5. The ball (64), which axially fixes the drill (80), can indeed also be regarded as a pawl in the sense of feature 4a. However, the groove (82) with which it cooperates is not formed on the shaft (60), as would be required by feature 5 b, but on the drill (80).

61 2. For the subject matter of patent claim 17, no deviating assessment results in this respect. This claim does not necessarily provide for a drive end and a tool end in the sense of features 2 a and 2 b, but it does provide for means for locking the tool on the longitudinal body (6) in the sense of features 3 c and

3 d so that the torque is transmitted from the longitudinal body to the tool.

62 IV. The contested decision does not prove to be correct in result for other reasons (Sec. 119(1) Patent Act).

63 1. K4 also does not anticipate the subject matter of claims 1 and 17.

64 a) K4 discloses a device for mounting a hole saw and a pilot drill.

65 An example of an embodiment is shown in Figure 3 reproduced below.

Figure - 3

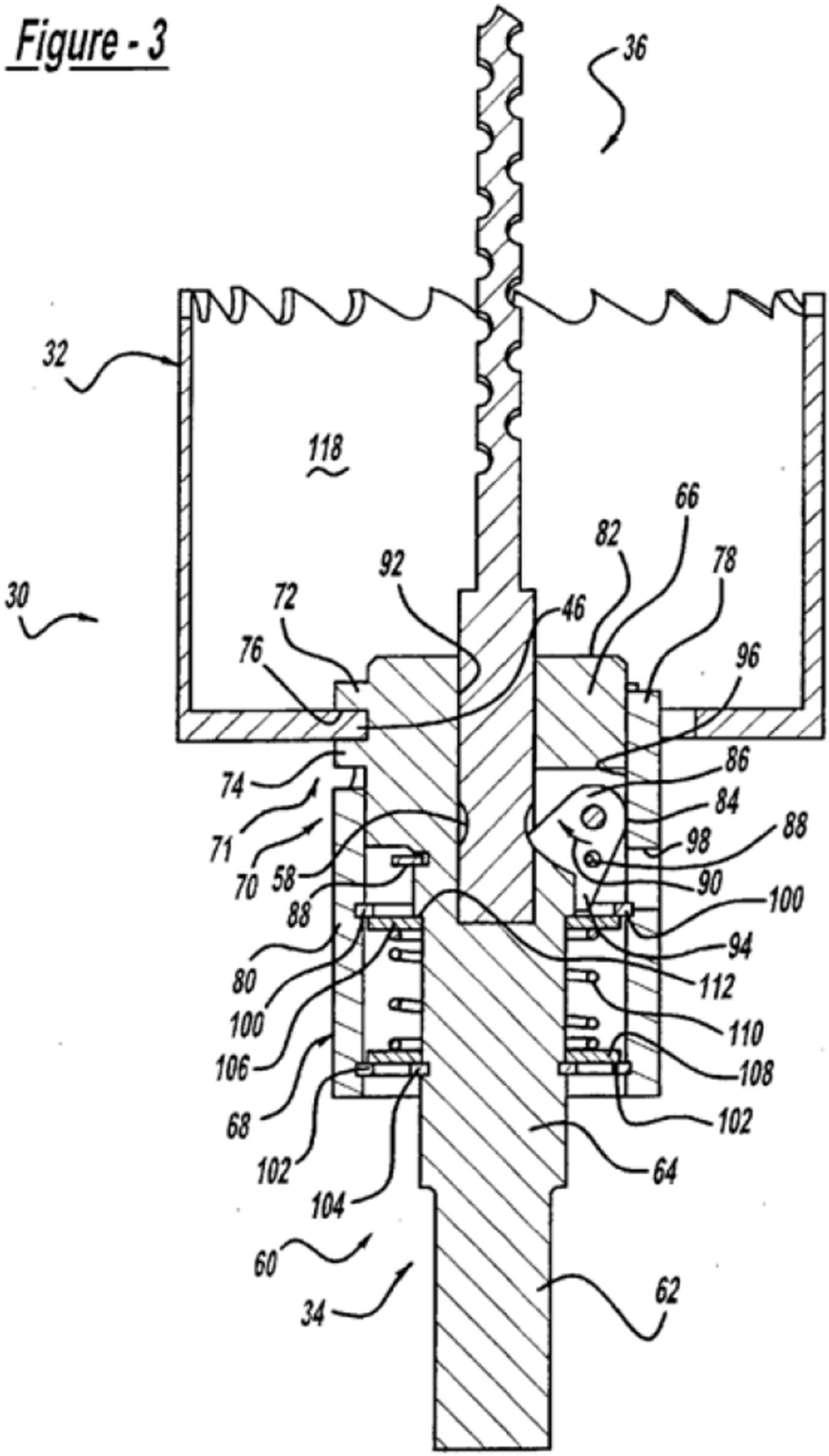
36
32
118
66
82
78
92
30
72
46
76
96
86
74
84
71
88
98
70
58
90
100
88
94
80
112
100
110
106
108
68
102
102
64
104
60
62
34

66 The mandrel (34) provided for connection to the drive includes a shank (62), a central section (64), and an enlarged forward segment (66) (p. 5 lines 40-43). Attached to the mandrel body (60) is a coupling assembly (70) that includes a selector sleeve (68) and cooperates with the segment (66) (p. 6 lines 912).

67 When the selector sleeve (68) is in its neutral position, the arbor (34) is coupled to the hole saw (32). In its release position, the hole saw can be coupled and uncoupled (p. 6 lines 16-21). For coupling, the hole saw (32) is aligned so that the rail sets (72, 74) formed on the mandrel (34) are aligned with relief pockets (44) of the hole saw (32). By pushing axially, the selector sleeve (68) is moved rearward until the hole saw (32) can be rotated so that mounting tabs (46) attached to it slide into the slot receptacles (76) between the rail sets (72, 74). In the final position, the sleeve projections (78) slide through the relief pockets (44). The hole saw (32) is then secured against radial displacement by the slot receptacles (76) and against rotation by the sleeve projections (78) (p. 6 line 41 to p. 7 line 42).

68 The selector sleeve also permits rapid coupling and decoupling of the pilot drill (36). This is held by a spring-loaded latch 86 (p. 8 lines 3-14).

69 b) Thus, there is also a lack of disclosure of the functional connection required by patent claim 1, irrespective of whether the mandrel body (60) or the pilot drill (36) is regarded as a longitudinal body within the meaning of feature group 2.

70 aa) If, as the plaintiff claims, the mandrel body (60) forms the longitudinal body, the function of the fastening means is assigned to the coupling arrangement (70) attached thereto. Either the hole saw (32) or the pilot drill (36) can be considered as a tool.

71 In both cases, as the defendant rightly asserts, there is in any case no disclosure of feature 3 a, because the coupling arrangement cannot be detached to remove the tool. Whether it can be removed for other purposes does not need to be decided because, for the reasons stated above, this is not sufficient to give rise to feature 3(a).

72 Furthermore, if the pilot drill (36) is regarded as a tool within the meaning of the patent in suit, the realization of feature 5 b is lacking. The groove (58), which serves to axially lock the pilot drill (36), is not formed on the mandrel body (60), but on the pilot drill (36).

73 bb) If, as the Patent Court assumed in its reference granted under Sec. 83(1) Patent Act, the pilot drill (36) forms the longitudinal body within the meaning of feature group 2, the function of the fastening means is assigned to the mandrel body (60) and the function of the tool to the hole saw (32).

74 In this view, similar to K8, there is a lack of disclosure of features 3 c and 3 d. The torque of the driving machine is transmitted to the hole saw (32) by the mandrel body (60) alone, but not by the pilot drill (36).

75 2. K6 also does not anticipate the protected subject matter.

76 a) K6 discloses an interchangeable mandrel for a hole saw.

77 An example of an embodiment is shown in Figure 1 reproduced below.

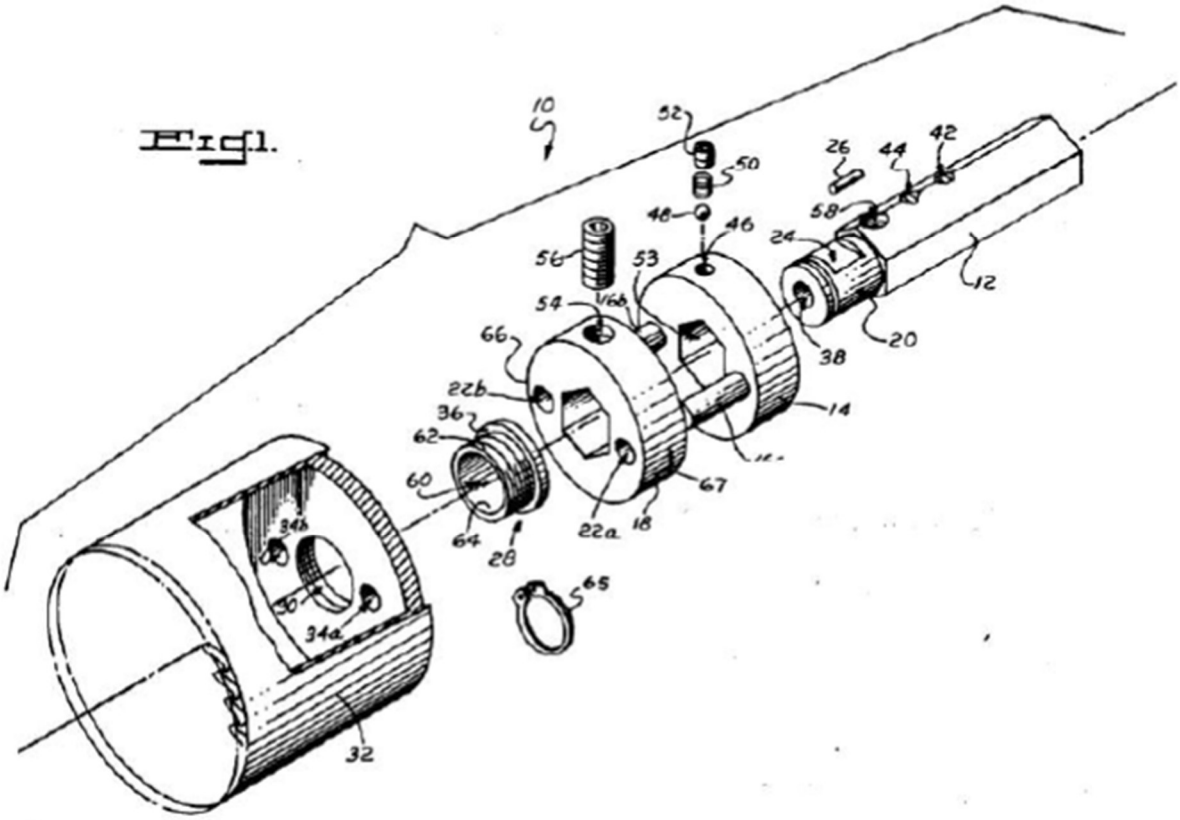

78 The interchangeable mandrel (10) comprises a drive shaft (12) onto which a drive hub plate (14), a drill plate (18) and a mounting sleeve (28) can be slid. The drive hub plate (14) can be fixed in two different positions by means of a ball (48) and two notches (42, 44). The drill plate (18) is fixed with a screw (56), the mounting sleeve (28) with a spring washer (65) which engages in a locking groove (62). A pilot drill (40) can be fixed in a hole (38). The hole saw (32) is screwed onto the thread formed on the mounting sleeve (28). When it reaches its final position, the drive hub plate (14) is moved to its forward position so that two drive hubs (16a, 16b) engage corresponding holes (34a, 34b) in the hole saw (Column 4 line 44 to column 5 line 58).

79 A locking cavity (24) is further formed on the drive shaft (12), in which a movable locking element (26) following gravity is located. In this way, it can be achieved that the fastening sleeve (28) can only rotate in one direction with respect to the drive shaft (12), depending on its orientation. By suitable positioning, it can thus be achieved that the fastening sleeve (12) does not rotate together with the hole saw (32) when the latter is screwed on and off (Column. 6 line 763).

80 b) Thus, as the defendant rightly asserts, there is no disclosure of feature 3(a).

81 It can be left open whether the retaining ring (65) can be removed without damage and the fastening means consisting of the mounting sleeve (28), the drill plate (38), the drive hub plate (14) and the locking element (26) can be removed. Even if this were to be affirmed, it was not sufficient to disclose feature 3(a).

82 As has been pointed out above, feature 3 a requires that the fastening means be releasable in connection with the operation contemplated for removing the tool. In the device disclosed in K6, removal of the hole saw is not accomplished by removing the mounting sleeve (28), drill plate (38) and drive hub plate (14), but by unscrewing them. To enable this, the locking element (26) is provided specifically.

83 In addition, a fastening with a locking ring is also disclosed in K4. From

the circumstance already shown above that the patent in suit designates such a connection as fixed, it can be deduced that it is not detachable in the sense of feature 3a.

84 3. The Japanese published application Sho61-284310 (K24), which was submitted for the first time in the appeal instance, does not lead to a different assessment.

85 It can be left open whether this new means of attack and the arguments of the plaintiff relating thereto are to be admitted in the appeal proceedings pursuant to Sec. 117 Patent Act and Sec. 531(2) sentence 1 No. 3 Code of Civil Procedure. In K24, the features of claims 1 and 17 are also not fully disclosed.

86 a) K24 discloses, according to the certified German translation (K24'), a hole saw with center drill.

87 An example of an embodiment is shown in Figures 1 and 2 reproduced below.

Fig. 2

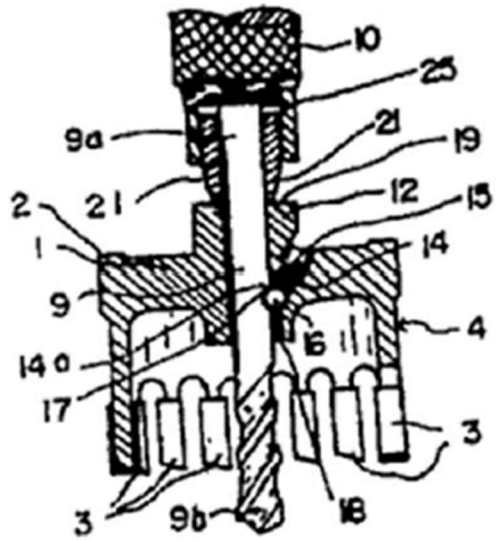

Fig. 1

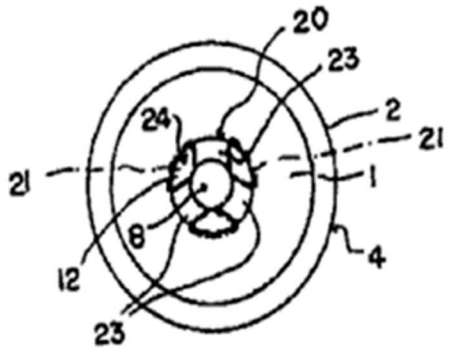

88 The hole saw consists of a disc (2) on which an outer blade (4) with cutting edges (3) is arranged (p. 2 below). The center drill (9) can be passed through a fitting hole (8). A ball (16) is arranged in another through hole (14), which is pressed in by a spring (15) and can engage in a concave section (17)

on the center drill (9). This makes it possible to control the movement of the center drill (9) both in the direction of rotation and in the axial direction when inserting it. In order to be able to release the center drill (9), a thin rod, for example a wire, is inserted in the through hole (18) from the opening at the front end (p. 3 above).

89 A fitting section (22) is formed at the top of the fitting hole (8) to clamp the center drill (9) by means of the claws (21) belonging to the chuck of an electric drill. The fitting section is formed of three convex fitting sections (23) shaped so that the claws (21) can be inserted into the concave sections (24) formed thereby. This causes the fitting sections (23) to transmit the rotational force of the drill to the outer blade (4) without slipping (p. 3 below).

90 b) Thus, there is a lack of clear and direct disclosure of feature 3 c.

91 The statements reproduced above in the description of K24, according to which the ball (16) fixes the center drill (9) also in the direction of rotation, refer only to the insertion of the drill and its correct alignment. In contrast, K24 only mentions the fitting sections (23) as a means of transmitting the torque generated by the drilling machine. Against this background, K24 does not state that a torque generated by the drilling machine is transmitted from the longitudinal body to the hole saw by means of the fastening means.

92 4. The subject matter of the patent in suit was also not suggested to the skilled person on the basis of the state of the art.

93 All citations show elaborate constructions with a multitude of coordinated details. That the skilled person had reason to take individual details from one of the disclosed devices and transfer them to another device is neither asserted nor otherwise apparent.

94 V. The legal dispute is ripe for final decision (Sec. 119(5) sentence 2 Patent Act).

95 It follows from the above considerations that the subject matter of the patent in suit is patentable. Therefore, the action must be dismissed in its entirety.

96 VI. The decision on costs is based on Sec. 121(2) Patent Act and Sec. 97(1) and Sec. 91(1) Code of Civil Procedure.

Bacher Grabinski Hoffmann

Deichfuß Marx

Previous instance:
Federal Patent Court, judgment of 30 October 2018 – 5 Ni 9/17 (EP) –