Deckblatt Übersetzung

Daten der Übersetzung:

Court/Gericht:	Bundesgerichtshof
Date of Decision / Datum der Entscheidung:	2015-09-15
Docket Number / Aktenzeichen:	X ZR 112/13
Name of Decision / Name der Entscheidung:	Teilreflektierende Folie

---

Arbeitskreis Patentgerichtswesen in Deutschland e.V.

FEDERAL COURT OF JUSTICE

IN THE NAME OF THE PEOPLE

JUDGMENT

X ZR 112/13

Pronounced on:
15 September 2015
Wermes
Judicial Secretary as
Clerk of the court
registry

in the patent nullity proceedings

Teilreflektierende Folie/
Partially reflective film

EPC Art. 87(1)

The priority of a prior application which contains a range indication can in any case be effectively claimed if the individual value or subrange claimed in the subsequent application which lies within this range is disclosed in the prior application as a possible embodiment of the invention.

Federal Court of Justice, judgment of 15 September 2015 - X ZR 112/13 –
Federal Patent Court

The X. Civil Senate of the Federal Court of Justice, following the oral hearing on 15 September 2015, attended by the presiding judge Prof. Dr. Meier-Beck, the judges Gröning, Dr. Bacher and Dr. Deichfuß as well as the judge Dr. Kober-Dehm

ruled that

On appeal by the defendant the judgment of the 4th Senate (Nullity Senate) of the Federal Patent Court of 1 August 2013 is amended.

The action is dismissed

The plaintiff shall bear the costs of the action.

Facts of the case:

1 The defendant is the owner of European patent 799 436 (patent in suit), which was granted with effect for the Federal Republic of Germany and was applied for on 31 August 1996, claiming the priority of German utility model 295 15 073 (L2). Following the conclusion of opposition proceedings, patent claim 1, which is directly or indirectly followed by twelve further claims, reads as follows:

> "Use of an image projector (12), a reflective surface (18) and a smooth transparent and partially reflective film (20) for displaying images in the background of a stage (28) or the like, the reflecting surface (18) being disposed on the floor (30) of the stage (28) in the central region thereof, and the film (20) extending between the floor (30) and the ceiling (32) of the stage (28) over the entire width thereof in such a manner that its lower end is held at a location between the reflecting surface (18) and the background of the stage (28) and its upper end is held at the ceiling (32) at a more forward location and the image projector (12) is disposed on the ceiling (32) in front of the upper end of the film (20) held there and directed toward the reflective surface (18) so that the light projected by the image projector (12) is first partially reflected by the reflective surface (18) so that a virtual image (26) is formed from the reflected light in the background of the stage (28), wherein the film (20) has an area of at least 3 by 4 m and is under tensile stress. "

2 In its nullity action, the plaintiff claims that the subject matter of claim 1 is based on an inadmissible extension and is not patentable. It also argues that L2 should be taken into account as state of the art because the patent in suit does not effectively claim the priority right of the application underlying L2. The defendant defended the patent in suit in the version it received in the opposition proceedings and, in the alternative, with two amended sets of claims.

3 The Patent Court declared the patent in suit null. This is the subject of the defendant's appeal, which continues to seek dismissal of the action.

Grounds of the decision:

4 I. 1. The patent in suit concerns the use of an image projector, a reflecting surface and a smooth, transparent and partially reflecting foil for the reproduction of images in the background of a stage. According to the description of the patent specification, it was known to present fixed or moving images in such a way that the presenter stood outside the cone of light between the projector and the screen and commented on the images. If the presenter steps into the cone of light in such an arrangement, the result is that the image is partially obscured from the viewers by the shadow cast by the presenter and thus cannot be seen. To explain the reproduced image, he must therefore remain outside the cone of light and make use of a pointing stick or a lamp with a sharply focused beam. In certain circumstances, it would be desirable for the speaker to be able to step into the image without disturbing its reproduction.

5 Against this background, the technical problem is to use the devices necessary for image or film projection in such a way as to make this possible.

6 2. In order to solve this problem, the patent in suit proposes the use of an image projector, the features of which can be divided as follows (deviating points of division of the Patent Court in square brackets):

1. Use of an image projector, a reflecting surface and a film for displaying images in the background of a stage or the like. [M1 in part]
2. The reflective surface is disposed on the floor of the stage

in the center area thereof. [M2]

3. The foil
   a) is smooth, [M1 partly]
   b) transparent, [M1 partially]
   c) and partially reflective; [M1 partial]
   d) it runs between the floor and the ceiling of the stage across its entire width in such a way that its lower end is held at a point between the reflective surface and the background of the stage and its upper end is held at the ceiling at a point further forward; [M3, M3a, M3b]
   e) it has an area of at least 3 m by 4 m; [M5]
   f) it is under tension. [M5a]

4. The image projector

a) is placed on the ceiling in front of the upper end of the foil held there; [M4, M4a].

(b) is directed toward the reflecting surface so that the light it projects is first partially reflected by the reflecting surface, so that a virtual image is formed from the reflected light in the background of the stage. [M4b, M4c, M4d]

7 Through such an arrangement, the light from the image projector is cast onto the reflective surface and then reflected in the transparency in such a way that it appears to the audience on the background of the stage. If the presenter stands behind the reflecting surface and the foil and thus outside the light cone, the image display is not disturbed. At the same time, it is possible for him to point out details of the reproduced image without any aids or to achieve special effects, for example, by moving with the images. Figures 2 and 4 of the patent specification reproduced below show a schematic side view of such an arrangement and a view from the perspective of the spectator.

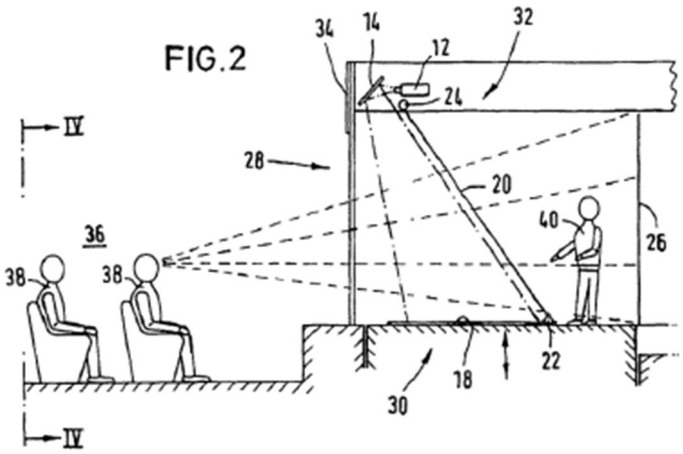

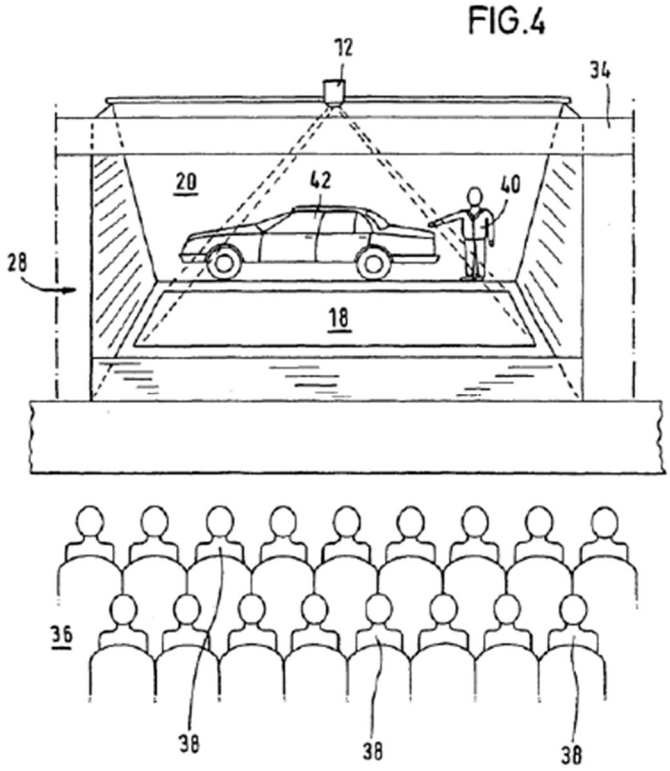

8 3. Some features require explanation:

9 a) The device elements described in feature 1 are intended to be used to display images in the background of a stage or the like. Thus, they can be used on a stage that is already present in a town hall, an auditorium, etc., and that is delimited from the auditorium, for example, by a platform. The phrase "or the like" also includes uses in which a certain area, such as a certain area of a hall, is identified as an area used for the display of images only by the arrangement of the device elements listed in feature 1, in particular by the film, and thus functions as a stage.

10 b) According to feature 2, the reflective surface is arranged on the floor of the stage in its central area. Taking into account the arrangement of the device elements mentioned in the claim as a whole and the intended light path, this is to be understood once to mean that the reflecting surface is not arranged in the rear area of the stage. Rather, according to feature 4b, the virtual image is to be formed there. In addition, it follows from feature 3d that the lower end of the foil is arranged behind the reflecting surface as seen from the auditorium. This means that a part of the stage floor is located behind the reflecting surface. The feature also indicates that the reflective surface is not located at the very front of the stage floor, which is explained by the fact that this surface is intended to reflect the light emitted by the image projector located further forward.

11 c) Image projector means a device comprising a light source and optical elements such as lenses, prisms or mirrors that allow the light to be directed outward to project an image.

12 According to feature 4a, the image projector is arranged on the ceiling in front of the upper end of the film held there. Insofar as the patent claim further states that the projector is held on the ceiling at a position further forward in relation to the lower end of the film, this has no independent factual content. The patent specification only deals with the area of the ceiling in which the image projector is arranged, but does not contain any information on how it is fastened or held there.

13 Feature 4a does not indicate that the image projector as a whole must be arranged in front of the upper end of the film. The skilled person, who is primarily concerned with the function of the image projector, rather understands this feature to mean that the area of the projector which directs the emerging light onto the reflecting surface is arranged in front of the upper end of the foil, and recognizes that it does not matter whether further parts of the projector, such as the housing of the light source, are arranged in front of, above or behind the upper end of the foil. In this understanding, the skilled person sees himself confirmed by Figures 1 to 3 and 5 of the patent in suit, each of which shows that while the mirror 14 as part of the image projector is arranged in front of the upper end of the foil, the housing of the light amplifier, on the other hand, is located partly above or even behind it.

14 Accordingly, feature 4b, according to which the image projector is directed towards the reflecting surface, is to be understood from a technical point of view as meaning that the part of the image projector from which the light emerges is directed towards this surface. This can also be, as shown by way of example in Figure 1, a mirror arranged in front of the light amplifier, which deflects the light emanating from the light source. Paragraph 11 of the description does not contradict this understanding of feature 4b. There, it is indeed mentioned that the light amplifier is aligned horizontally and radiates in the direction of the auditorium. If this were to remain the case, however, the light path required for the desired creation of a virtual image in the background of the stage could not be achieved, as is readily apparent to the skilled person. The light shining in the direction of the auditorium must therefore be redirected to the reflecting surface by a mirror or the like, as shown in Figure 1. Insofar as this is referred to in paragraph 11 only as a "further embodiment", this is obviously an imprecise formulation. For the skilled person it is not doubtful that the deflection of the light beam in such an arrangement of the light amplifier is not optional but always necessary.

15 d) Feature 3c, according to which the film is partially reflective, cannot be inferred, contrary to the plaintiff’s opinion, that this must be an inherent property of the film. For the achievement of the objective pursued by the technical teaching, it is not important whether the film as such is partially reflective under all conceivable conditions of use. The only decisive factor is whether it has partially reflective properties in the specific arrangement in which it is used. This understanding is also suggested by paragraph 12 of the description, where the partially reflective property of the film is described in connection with the specific arrangement according to features 3d and 3f.

16 e) Feature 3e, according to which the foil has an area of at least 3 m by 4 m, specifies a minimum size suitable for the field of application which is in the foreground according to the description of the patent in suit, namely the presentation of slides or films in front of several spectators with the participation of a lecturer, as exemplarily shown in figures 2 and 4, and in which there is space for the presentation of an image content to be explained next to the lecturer standing on the stage.

17 II. The Patent Court (GRUR-RR 2013, 500 = Mitt 2013, 455) substantiated its decision essentially as follows:

18 The patent in suit had to be declared null as granted because the subject matter of claim 1 went beyond the content of the original application. In the original application documents (WO 97/11405 = L3), with regard to the reflective behavior of the foil, it was merely stated that it should reflect 30% to 50%, preferably 30%, of the light striking it. The skilled person, a professionally experienced university engineer specializing in electrical engineering or optics with experience in the field of theater and event technology, would see the disclosure content of the application limited to this. Feature M1 (here: feature 3c), according to which the foil is partially reflective, thus represents a generalization which was not disclosed in the original application documents. In this context, it also had to be taken into account that partially reflective films were not common at the time of filing, so that for the skilled person, who was to realize the technical teaching, a range indication was important as a prerequisite for a successful implementation of the teaching. He had therefore not understood this indication to represent only an example of an embodiment.

19 The patent in suit could also not be maintained according to auxiliary request I, because patent claim 1 in this version was also based on an inadmissible extension.

20 In the version of patent claim 1 according to auxiliary request II, the inadmissible extension was eliminated by the inclusion of the additional feature according to which the foil reflects 30% to 50% of the light hitting it. Even in this version, the defendant could not effectively claim the priority of L2. Feature 5 (here: feature 3e) according to which the foil has an area of at least 3 m by 4 m is not disclosed in L2. This document did not contain any information or figures from which the area claimed in feature 5 could be taken directly and unambiguously. Thus, the priority of the filing date of 31 August 1996, applied to the patent in suit. At the same time, document L2 published before that date had to be taken into account as state of the art. The attempt of the defendant to achieve by a so-called priority disclaimer that priority could be claimed for all other features except feature 5 was not admissible.

21 The subject matter of patent claim 1 as amended by auxiliary request II was thereafter novel, but suggested by the state of the art. L2 discloses all features except feature 5. Since L2 describes that the foil should run between the floor and the ceiling of the stage over its entire width, it is self-evident for the skilled person on the basis of simple further considerations to adapt the size of the foil to the size of the stage. Based on usual stage sizes, he would thereafter choose the foil size to have an area of at least 3m by 4m. In contrast, the further state of the art submitted by the plaintiff was not suitable to suggest the subject matter of patent claim 1; this also applied to the German published application 38 08 406 (L13) and the description of an arrangement for generating a virtual image on a stage ("Pepper's Ghost Illusion") submitted as Annex L8.

22 III. This assessment does not stand up to review in the appeal proceedings.

23 1. The opinion of the Patent Court that the subject matter of claim 1 according to the main request goes beyond the content of the application as originally filed (L3) is not correct.

24 a) According to Art. II Sec. 6(1) sentence 1 No. 3 German Act on International Patent Conventions, a European patent shall be declared null with effect for the territory of the Federal Republic of Germany if its subject matter goes beyond the content of the application as originally filed. The relevant content of the application is to be determined on the basis of the entirety of the documents originally filed. The decisive factor is what the skilled person in the relevant field of technology with average knowledge and skills, who according to the correct explanations of the Patent Court is a professionally experienced engineer from a technical college specializing in electrical engineering or optics with experience in the field of theater and event technology, can take from the original documents as belonging to the invention (Federal Court of Justice, judgment of 17 February 2015 X ZR 161/12, GRUR 2015, 573 marginal no. 21 Wound treatment device).

25 b) An inadmissible extension is not to be seen in the fact that the foil is described in patent claim 1 as being partially reflective.

26 However, the foil is not explicitly described as partially reflective in the description of L3 nor in the claims formulated there. Nevertheless, this property of the foil results directly and unambiguously for the skilled person from the L3. In the description of L3, reference is made by way of introduction to the so-called ghost trick, as it is also described in L8. It is then explained that a comparable effect is to be achieved here by the arrangement of a reflecting surface on the floor of the stage and a transparent, smooth foil running between the floor and the ceiling of the stage. In this regard, it is described that the device makes use of the physical principle that a motorist can observe on the windshield of his vehicle when an object lying on the shelf appears to be in front of the windshield from the motorist's point of view. According to the teaching of the invention, the reflective surface should correspond to the shelf. The object is then reflected in the transparent smooth film in such a way that it appears to the viewer on the background of the stage (p. 3, center). The skilled person readily understands from this representation that the transparent film is not completely transparent, otherwise the light would simply fall through it, which at the same time means that it reflects the light directed onto it to a certain extent, i.e. that it has reflective properties. The fact that the film is not conclusively described with the statements that it is smooth and transparent is also apparent to the skilled person from the description of the mode of operation of the proposed use in L3. Taking into account Figure 4 and the aim of the invention explained in the general part of the description, namely to make it possible for the presenter to move (apparently) in front of the image without impairing its perception by the spectators (p. 3), it is clear from the point of view of the skilled person that the foil must not be completely transparent, because otherwise the image would not be visible to the spectator. This means nothing other than that the film must partially reflect the light. If it reflected the projected light completely, the spectators would not be able to see the presenter who is behind the foil. It is thus immediately and unambiguously clear from L3 that the film is partially reflective. Against this background, the skilled person understands the passage on p. 4, 2nd paragraph of the L3 as a more detailed explanation of the teaching according to the invention to the effect that it is advantageous if the foil reflects 30% to 50% of the light striking it, and particularly preferable if it reflects 30% of the light striking it.

27 c) The indication in claim 1 that the image projector is held on the ceiling at a position which is further forward with respect to the lower end of the foil extending from the floor to the ceiling is also not based on an impermissible extension. As explained above, this feature, which is not mentioned in L3, has no independent meaning; it says nothing other than that the projector is arranged on the ceiling at a position further forward.

28 2. The subject matter of claim 1 according to the main request is also patentable. For the assessment of patentability the utility model specification 295 15 073 (L2) has to be disregarded because the patent in suit effectively claims its priority. The further state of the art is not suitable to question the patentability of the subject matter of patent claim 1.

29 a) When filing a European patent application, the priority right of a preceding utility model application may be claimed under Art. 87(1) EPC if both concern the same invention. This requirement is met if the combination of features claimed in the subsequent application is disclosed in its entirety in the previous application as belonging to the invention applied for. The subject matter of the claimed invention must be disclosed identically in the priority document; it must be the same invention. In this context, the disclosure of the subject matter of the first application is not limited to the claims formulated therein; rather, it must be determined from the entirety of the application documents. The principles of novelty examination apply to the assessment of identical disclosure. According to the established case law of the Senate, this requires that the skilled person can directly and unambiguously infer the technical teaching designated in the claim from the original documents as a possible embodiment of the invention (Federal Court of Justice, judgment of 11 February 2014 X ZR 107/12, BGHZ 200, 63 marginal no. 19 et seqq. mwN Kommunikationskanal).

30 b) According to this requirement, the patent in suit effectively claims the priority right of L2.

31 aa) Contrary to the plaintiff’s assumption, the fact that claim 1 and the heading of the patent refer to a device does not prevent the claiming of L2's priority right, because L2 also deals throughout solely with how the device

elements described in more detail are used to display images.

32 bb) Also the fact that L2 does not contain any specific information on the dimensions of the foil does not mean that the patent in suit cannot claim the priority of L2.

33 The lack of dimensional information suggests that the disclosure content of the original application documents covers the use of films of different sizes and thus also those having a smaller area than 3m by 4m. L2 speaks in general terms of film and image presentations to an audience. This leaves open the possibility that not only very large stages, for example in town halls or the like, are meant, but also very small stages in rooms for a few spectators, which would have the consequence that a very wide range of foil sizes could be considered. L2 thus indirectly discloses, without committing itself to specific dimensions, a broad range indication which is limited only by the term stage and in any case includes usual stage sizes.

34 It can be left open whether in such a case all individual values or partial ranges within this range are at the same time to be regarded as disclosed. Furthermore, it can be left open whether it is sufficient for claiming the priority right of a prior application with such a range indication if the subsequent application is limited to individual values or partial ranges which lie within the range indicated in the prior application and no other technical effects are associated with this limitation. In any case, the priority of a prior application which contains a range indication can be effectively claimed if the individual value or partial range claimed in the subsequent application which lies within this range is disclosed in the prior application as a possible embodiment of the invention.

35 This is the situation here. A minimum area of the film of 3 m by 4 m can be directly and unambiguously inferred by the skilled person from L2 as a possible embodiment of the invention. Figures 2 and 4 of the patent in suit, reproduced above, are already found in L2 with minimal, here insignificant deviations. From the ratio of the size of the presenter (reference sign 38) to the distance between the stage floor and ceiling, and taking into account the fact that the foil does not run vertically but at an angle, it is readily apparent that the

foil shown there has a height of at least 3 meters. Figure 4 also shows that the film is at least 4 m wide. This is clear not only from the fact that the width of the foil noticeably exceeds its height, but also from the size relationships between the presenter and the image object, which can be seen in Figure 4.

36 The fact that L2 also includes other designs in which smaller foils are used, as may be assumed in favor of the plaintiff, does not prevent the priority right of the prior application from being claimed.

37 cc) Without success, the plaintiff claims that the teaching of the patent in suit differs from L2 with regard to feature 4b, which calls into question the identity of the invention in the previous and subsequent applications.

38 The plaintiff states that if the patent in suit is interpreted consistently, in particular if the reference of claim 4 back to the main claim is taken into account, the patent in suit must be understood to mean that it is not necessary for the image projector itself to direct the emitted light onto the reflecting surface, but that this can also be done by means of a mirror arranged in front of the image projector which deflects the light. Such an arrangement was not shown in L2.

39 This argumentation is based on an incorrect interpretation of patent claim 1. By an image projector in the sense of feature 2 is to be understood, as explained above, a device comprising not only the light source, but also lenses, prisms, mirrors or the like which direct the light outward to project the image. In the same sense, however, the L2 already speaks of an image projector referred to there as an image generator, which is described solely functionally to the effect that it casts the image onto the reflecting surface. Even if figures 1 to 3, unlike the corresponding figures of the patent in suit, do not show an arrangement of light amplifier and mirror, but only depict the image generator quite schematically, the skilled person recognizes that functionally it is only important that the light for generating the image to be projected emerges from the projector at a point located in front of the front end of the film and is directed onto the reflecting surface. Under these circumstances, there are no indications that the skilled person reading the L2 understands the term "image generator" restrictively to mean only devices in which the light source and lens are arranged in such a way that the light is not deflected.

40 dd) Finally, the claiming of the priority right of L2 is not called into question by the fact that the description of L2 states that the speaker stands in front of the reflecting surface as seen from the auditorium (p. 3, first paragraph), whereas the description of the application for the patent in suit states that he stands behind this surface. As can already be seen from the following sentence of the description of the L2, this wording is obviously based on a clerical error. The conclusion that this means that neither the image of the speaker is shown on the background nor that he disturbs the image display would obviously not apply if the speaker were standing in front of the reflecting surface instead of behind it. The same applies to the comparable wording in the last sentence of the first paragraph on page 4 of the L2.

41 If the patent in suit thus rightly claims the priority right of L2, the latter must be disregarded when assessing the patentability of the subject matter of claim 1.

42 c) The German published application 38 08 406 (L13) does not question the patentability of the subject-matter of claim 1.

43 aa) In figures 1 to 7, in particular in figure 6 and the accompanying description, L13 presents a device in the manner of a display which can be used, for example, at an exhibition or trade fair, in shop windows, in museums or the like.

44 This device is thus, in contrast to the subject matter of patent claim 1, not related to the use on a stage. Although it is suitable for displaying virtual images, there is no stage or the like in the background of which the display of the image is to take place (feature 1, feature 4b). This also means that a meaningful assignment of the floor and ceiling of the stage is not possible.

45 The screen (4'), which corresponds to the reflecting surface according to feature 2, occupies the entire width of the lower area of the housing (1) according to Figure 6. Even if this lower area of the housing were to be regarded as the stage floor, the screen is not arranged in the central area of the stage, because this would require, as explained, that there is an area of the stage floor in front of and behind it, in relation to the viewing direction of the spectators,

which is not occupied by the reflecting surface. From the L13 and the plaintiff's submission in this regard, there are also no indications that the device shown in Figure 6 is placed on a stage (Feature 2).

46 In the device shown in Figure 6, the light reflected from the screen (4') is not directed onto a foil, but onto a disc (2) (feature 3). Its upper end is not held to the ceiling. Rather, the disk is held only at its lower end by the axle (3) (feature 3d). The disc is not under tensile stress (feature 3f), and furthermore it cannot be inferred from L13 that it has an area of at least 3 m by 4 m (feature 3e).

47 bb) L13 also describes, as a further embodiment, a device for generating virtual images, which is designed as a relatively large and wide and correspondingly deep stage and is shown in particular in Figure 8.

48 A deflection mirror (41), which is arranged on the floor of the lower projection space (38), serves there as reflecting surface. Since there is a region of the stepped stage floor both in front of and behind it which does not have a reflecting surface, an arrangement of the reflecting surface in the central region of the stage is disclosed (feature 2).

49 Also in Figure 8, a disc (2) is used rather than a partially reflective sheet (Feature 3). It cannot be inferred from the description that this is under tensile stress, nor that it has an area of at least 3 m by 4 m (features 3e and 3f).

50 The image projector (14) is not arranged on the ceiling of the stage, but below the stepped stage floor in a part of the device designated as projection space (38) (feature 4a).

51 cc) No suggestion arose from the state of the art for the skilled person to move from the devices described in L13 to the subject matter of patent claim 1.

52 From the point of view of the skilled person, the state of the art at the priority date offered no suggestion to use a partially reflective foil instead of the disk used in L13. As far as the plaintiff refers in this context to the German patent 44 45 302 (L9b) and the international application WO 95/33540 (L11), these cannot be taken into account because they were published only after the priority

date. From the brochure "Foil Mirror", submitted as annex L9, it only appears that the use of mirror foils, which reflect to different degrees, was already known in 1986 and that an exploitation of the resulting possibilities was also considered on stage. According to L9, however, such a foil mirror can only be realized up to a size of 6 m by 1.3 m, so the skilled person would not have considered the use of such foils for the minimum area claimed in patent claim 1.

53 L13 shows in both Figure 6 and Figure 8 complexly constructed devices used in their entirety to create virtual images. In both embodiments described there, a stepped arrangement is shown in which the reflective surface from which light is directed onto the partially reflective disk is placed well below the bottom edge of the virtual image. Therefore, there is no suggestion from L13 to arrive at the technical teaching according to claim 1 of the patent in suit, which aims at using an already existing stage to provide, with the help of a few components projector, reflecting surface and partially reflecting sheet, the possibility to create effective image presentations without the need for a stepped arrangement of reflecting surface and stage background.

54 Finally, it cannot be assumed that the skilled person receives the suggestion from Figure 6 of L13 to redesign the device shown in Figure 8 in such a way that the image projector is not arranged below the stage but on the stage ceiling in front of the partially reflecting screen and directed downwards. This is not only contradicted by the fact that in the description of the embodiment according to Figure 8 it is emphasized that the arrangement of the projector in the lower stage space (39) creates the possibility of varying the distance of the screen (4) from the deflecting mirror (41) and thus of having the aerial images appear at different depths in the stage space, but also by the fact that other device elements projectors (43) and loudspeakers (48) are already provided on the stage ceiling in the area of the upper end of the partially transparent pane.

55 d) The Patent Court correctly explained that the description of the "Pepper's Ghost Illusion" (L8) does not prevent the patentability of the subject matter of claim 1. Reference is made to these statements, which the plaintiff has not challenged on appeal.

56 IV. The decision on costs is based on Sec. 121(2) Patent Act and Sec. 91(1) Code of Civil Procedure.

Meier-Beck Gröning Bacher

Deichfuß Kober-Dehm

Previous instance:
Federal Patent Court, judgment of 01 August 2013 – 4 Ni 28/11 (EP) –